GEN-6393A03 Network Horn Speaker



SIP POE Multicast IP66

INTRODUCTION

The GEN-6393A03 is a network horn speaker that supports both DC and PoE power supply. It can receive calls from SIP phones and VMS platforms, and supports up to 20 multicast streams. The device provides storage for up to 20 audio files, and supports priority management, scheduled playback, and custom actions via HTTP API triggers. It is well suited for a wide range of outdoor and industrial applications, including factories, public safety projects, campuses, parks, and transportation hubs.

MAIN FEATURES

- **Multi-Source Audio Reception:** Supports reception of SIP audio, ONVIF audio, and multicast streams.
- **Local Audio Storage:** Built-in 80 MB local storage for up to 20 WAV/MP3 audio files.
- **Control I/O:** Provides one control input and one control output, with configurable 12 V DC output via the web interface.
- **Two-Way Communication:** Built-in microphone supports two-way communication.
- **HTTP API Trigger:** Supports HTTP API for triggering local file playback.
- **IP66 Protection:** Features an ABS housing with a stainless steel bracket and IP66-rated protection.
- **Scheduled Playback:** Built-in scheduler for timed playback of local audio files.
- **Flexible Power Supply:** Supports PoE / PoE+ and DC power supply.

PARAMETERS:

Network Interface	10/100Base-TX, RJ45
PoE	IEEE 802.3af/at
Power Input	1 × DC 12–24 V
Network Protocols	TCP/IP, UDP, HTTP, RTP, RTSP, ARP, ICMP, NTP, SIP, ONVIF, DHCP
Configuration	Web interface or DevConfig Tool
Audio Transmission	Multicast, up to 20 streams (editable)
Audio Codec	Opus, PCMU (G.711u), PCMA (G.711a), G.722
Audio File Format	WAV, MP3
Audio Storage	80 MB local storage, up to 20 audio files
Audio Stream	WAV 8/16/22/44.1/48 kHz, 8/16-bit, mono/stereo; MP3 32/44.1/48 kHz, 64–320 kbps, CBR/VBR, mono/stereo
Frequency Response	400 Hz to 7 kHz
SNR	⩾90 dB
Amplifier	Built-in Class-D amplifier
Rated Power	15 W (DC 12 V / PoE / PoE+), 30 W (DC 24 V)
Speaker Component	1.5" midrange driver unit
Sensitivity	107 dB (1 m / 1 W / 1 kHz)
Max. SPL	121 dB (1 m / 30 W / 1 kHz)
Coverage Pattern	884 Hz H120° / V120°; 1.77 kHz H35° / V70°; 3.54 kHz H30° / V28°; 7.07 kHz H22° / V15°
Control Input	1
Control Output	1 × relay output / 12 V DC output, switchable
Reset Button	1
Microphone	Electret condenser microphone
Directionality	Omnidirectional
Microphone Installation	Built-in
Microphone Sensitivity	-45 ± 3 dB
Microphone SNR	58 dB
Max. Input Sound Level	110 dB (THD < 1%)
Housing Material	ABS housing + SUS304 bracket
IP Rating	IP66
Color	White
Mounting	Wall-mounted or pole-mounted
Application Environment	Indoor/Outdoor
Operating Temperature	-20°C to +60°C
Operating Humidity	⩽90% RH, non-condensing

PARAMETERS:

Dimensions	282 × 204 × 287 mm
Package Dimensions	310 × 250 × 310 mm
Weight	1.95 kg
Warranty	2 Years

ACCESSORIES:

ACCESSORIES	1 × Power Adapter (DC 24 V / 1.5 A, Optional) 1 × Connection Terminal (3.81mm, 4-pin) 1 × Waterproof Joint

CONNECTION DIAGRAM

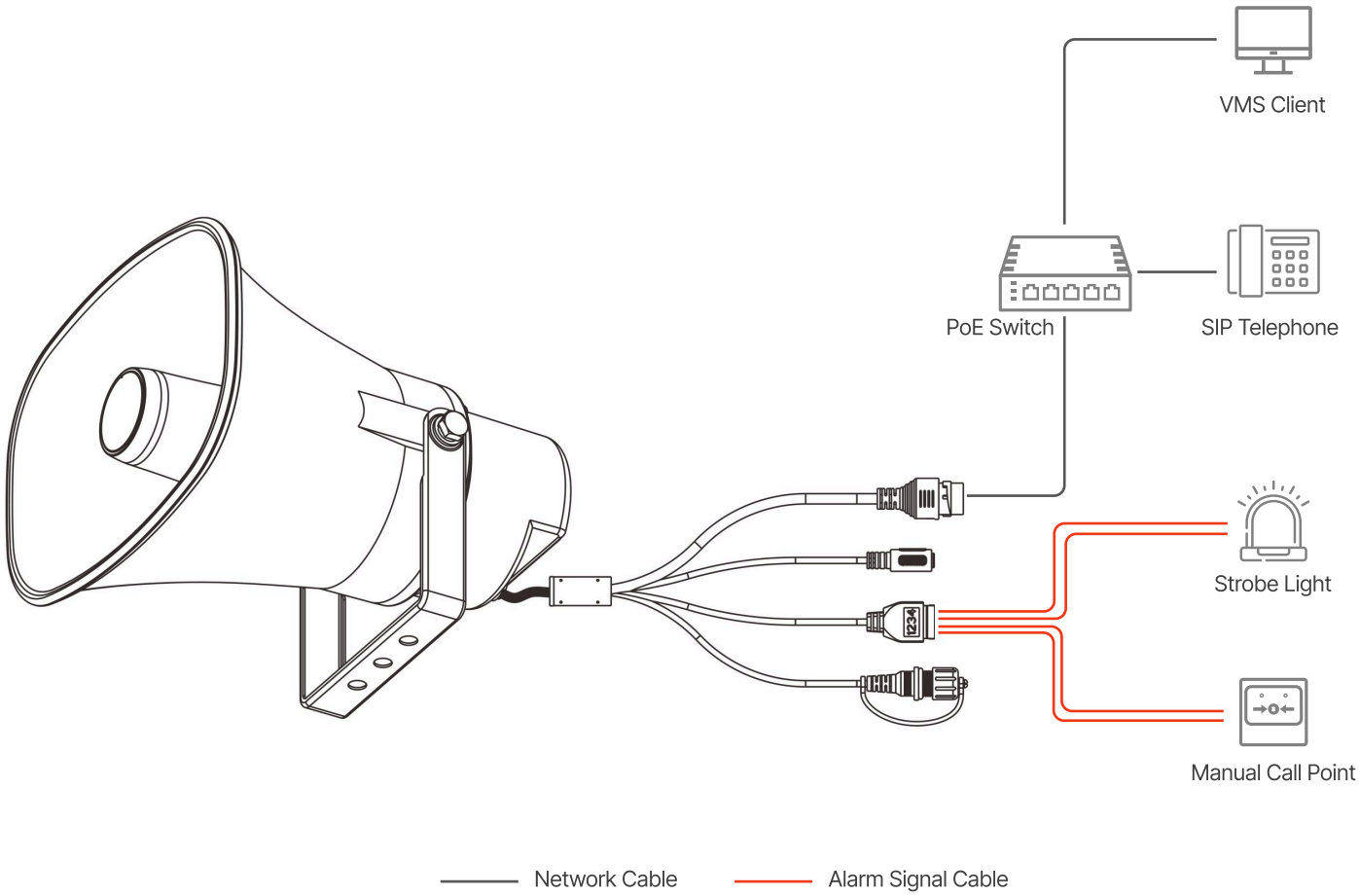

APPLICATION 1

The GEN-6393A03 Network Horn Speaker adopts standard industrial audio communication protocols and supports receiving audio streams via SIP, ONVIF, and multicast. The terminal features multiple I/O control interfaces: 1 alarm input, 1 output and supports HTTP commands, facilitating integration with third-party systems.

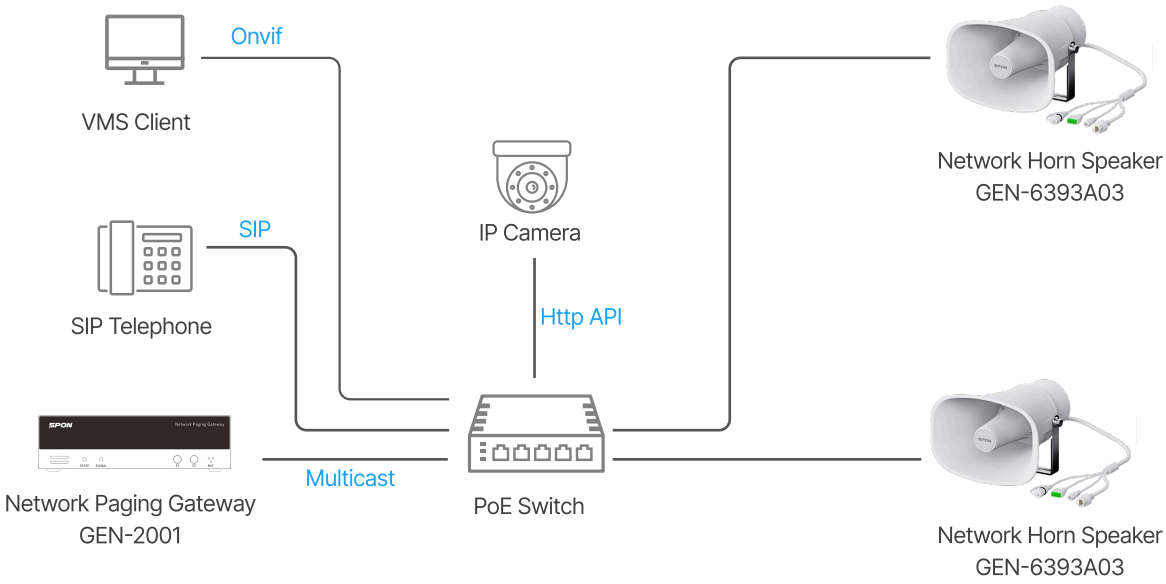

APPLICATION 2

The Network Horn Speaker GEN-6393A03 supports paging from SIP phone by using multicast address, the multicast address and priority can be set on its webpage.

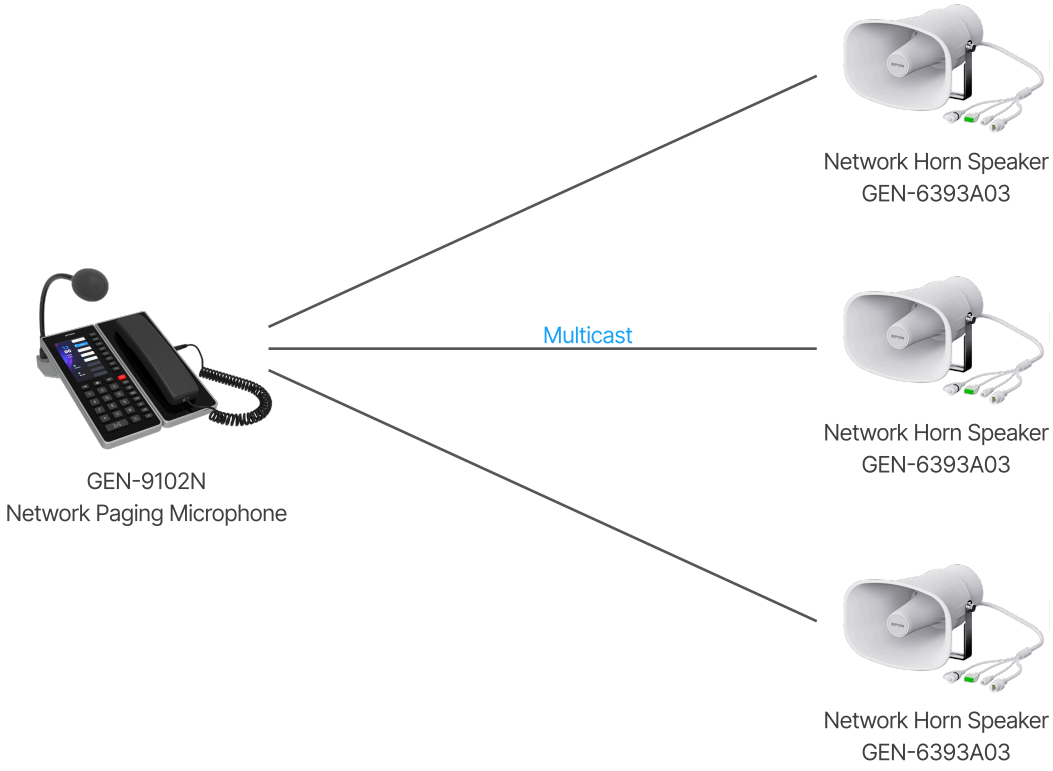

APPLICATION 3

The Network Horn Speaker GEN-6393A03 supports ONVIF protocol and can be registered to a third-party monitoring system. In an emergency, the operator can directly make a live announcements to the speaker on the monitoring platform.

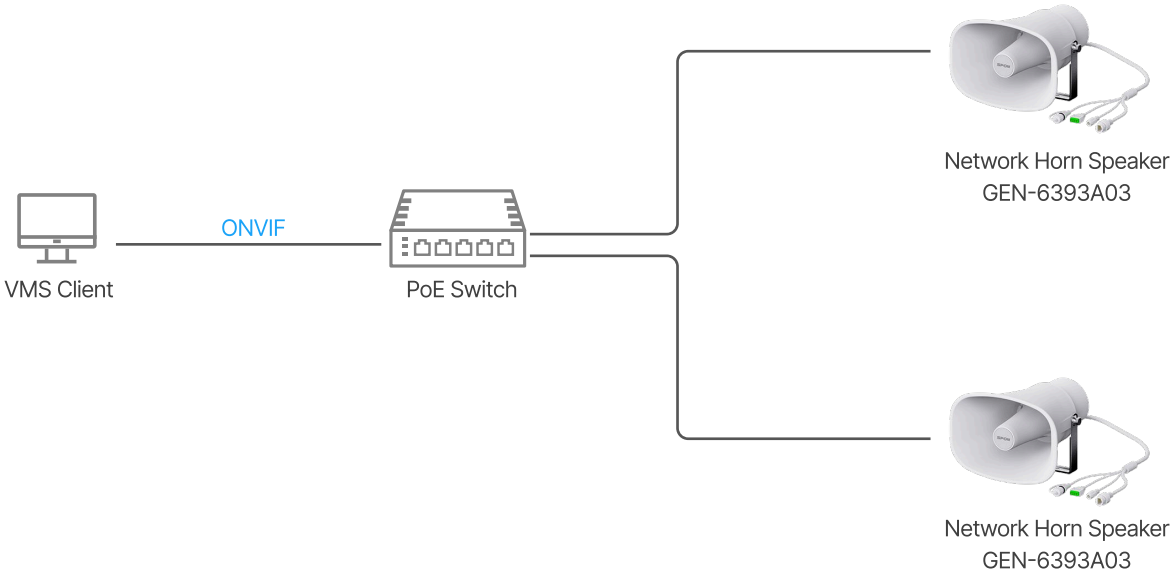

DIMENSION

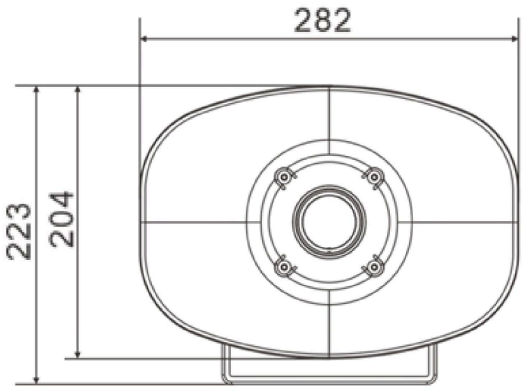

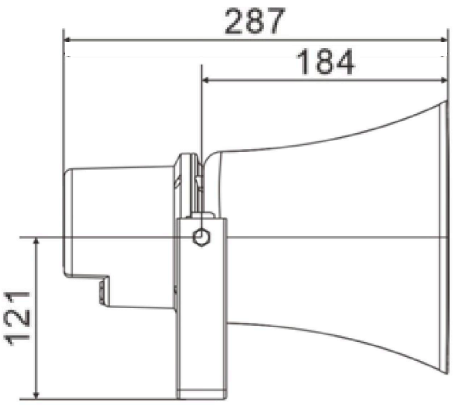

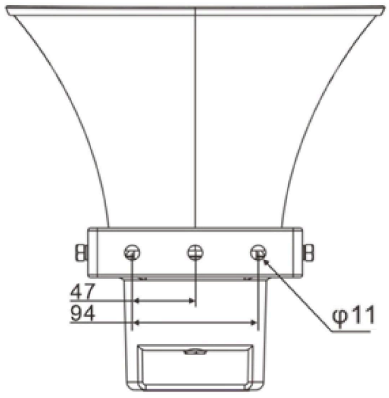

GEN-6393A03				
PRODUCT DESCRIPTION	OUTER DIMENSIONS (W*H*D)	WEIGHT	UNIT HEIGHT	MM
NETWORK HORN SPEAKER	282 x 204 x 287 mm	1.95 kg	N/A	