SPON

INSTALLATION GUIDE

Micphone Panle
GEN-4101



www.sponcomm.com

Preamble

- **About This Document**
  - This guide provides essential safety and usage instructions for network audio products, intended for users, installers, and maintenance personnel.
  - The Company reserves the right to update this document without notice. Changes will be reflected in future versions. While efforts are made to ensure accuracy, technical details, functions, and descriptions are subject to final interpretation by the Company.
  - Please read all sections before use. This document applies to multiple product models; refer to the actual product for specific features and appearance.

Safety Instructions for Use

- **Transportation Requirements**
  - **Packaging**: Always use the original packaging or equivalent protective materials to prevent damage during transit. Ensure the product is securely fixed inside the packaging.
  - **Handling**: Avoid dropping, shaking, or subjecting the product to excessive force.
  - **Environment**: Do not expose the product to extreme temperatures, moisture, or direct sunlight during transportation.
- **Storage Requirements**
  - Temperature and Humidity: Store the product in a dry environment with a temperature range of -20°C to 60°C (-4°F to 140°F) and humidity below 85% RH.
  - Placement: Avoid stacking heavy objects on top of the product. Store it in a clean, dust-free area away from corrosive substances. Power Off: Ensure the device is fully powered off before long-term storage.
- **Installation Requirements**
  - **Location:** Install the product in a well-ventilated area, away from heat sources, moisture, and flammable materials.
  - **Mounting:** Follow the installation guide to securely mount the device on a wall or surface. Use only the provided mounting accessories.
  - **Power Supply:**Use a DC 24V power adapter with the correct specifications or a compatible PoE (Power over Ethernet) injector/ switch compliant with IEEE 802.3af/at standards.
- **Operation Requirements Environment**
  - **Safety:** Do not touch the device with wet hands. Avoid handling cables during thunderstorms to prevent electric shock. Power Management: Ensure proper grounding and avoid overloading power circuits.

Device interface and wiring instructions

○ **Front Panel**

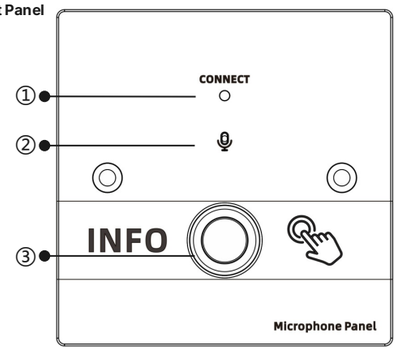

①**State Indicator Light**:Constant on when power on
②**MIC**:Constant on when power on ,flashing when receive task.
③**Function button**:Press the button to trigger the corresponding task,and configure the specific function on the connected device.

○ **Rear Panel**

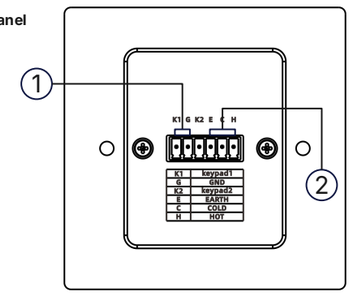

①**Button terminal**:The Ground Terminal provides a safe electrical ground connection.
②**Balanced output terminal**:This port is a function multiplexing port designed to serve two main purposes. Firstly, it outputs the audio captured by the microphone (MIC) to the connected device. Secondly, it acts as a power supply port, providing power from the connected device to the panel.

Product Packing List& Dimensions



Wiring Terminal
1 pcs(3.5 - 6P)



M4*25
2 pcs



Quick Install
manual 1 pcs



Certification
1 pcs

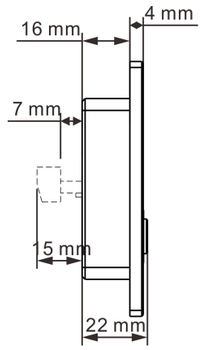

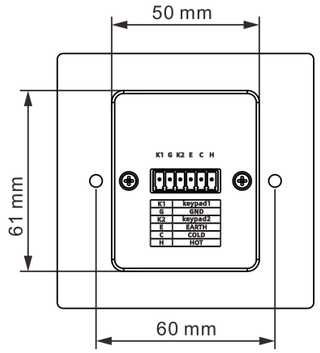

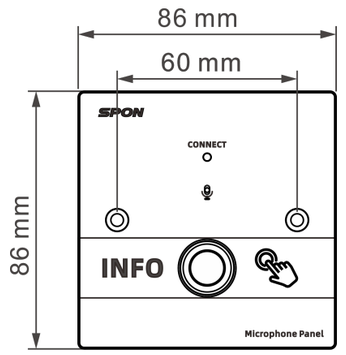

Installation Scenario

The panel supports both open and concealed installation in 86 box mode, and the 86 box mounting chassis needs to be provided by the user. The panel needs to reserve shielded 4-core wires（With shielded） for installation.

Recommended:
Adapts to 24 AWG standard 4-core wire gauge.

First, screw the 86 box into the wall.

Note
Please select the screw type and specification according to the actual material of the wall.

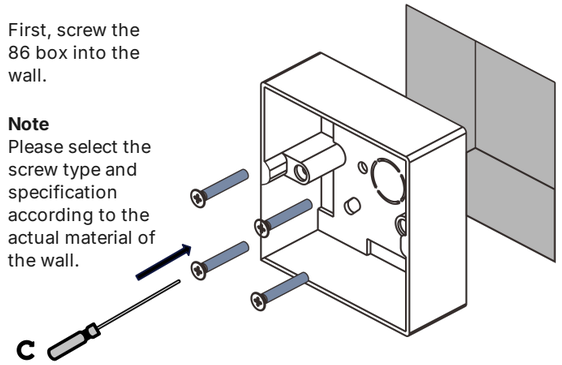

Align the panel mounting holes with the chassis holes and tighten the screws.

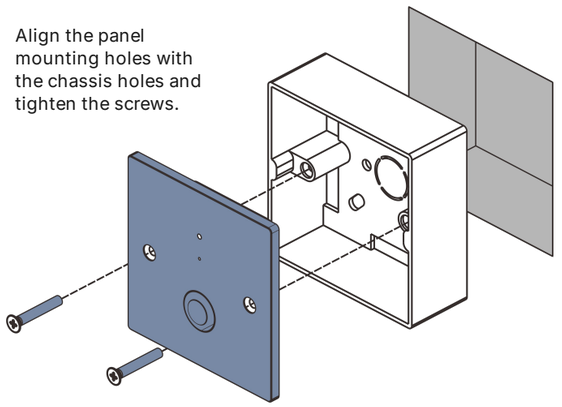

First, screw the 86 box into the wall.

Note
Please select the screw type and specification according to the actual material of the wall.

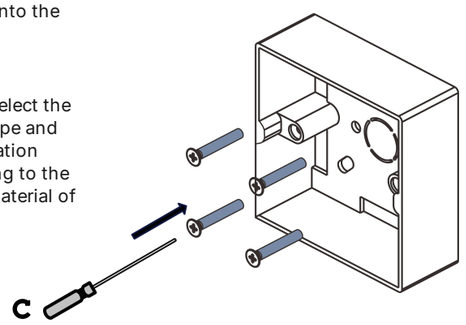

Align the panel mounting holes with the chassis holes and tighten the screws.

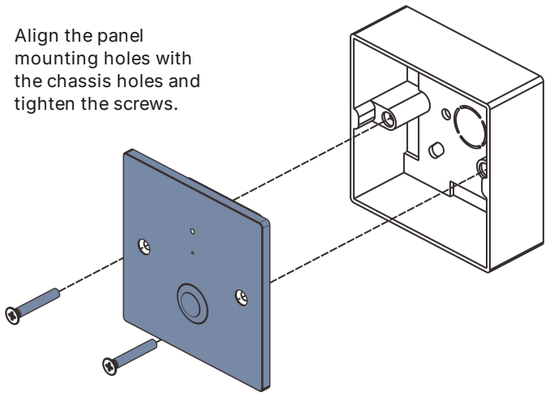

Wiring Schematic

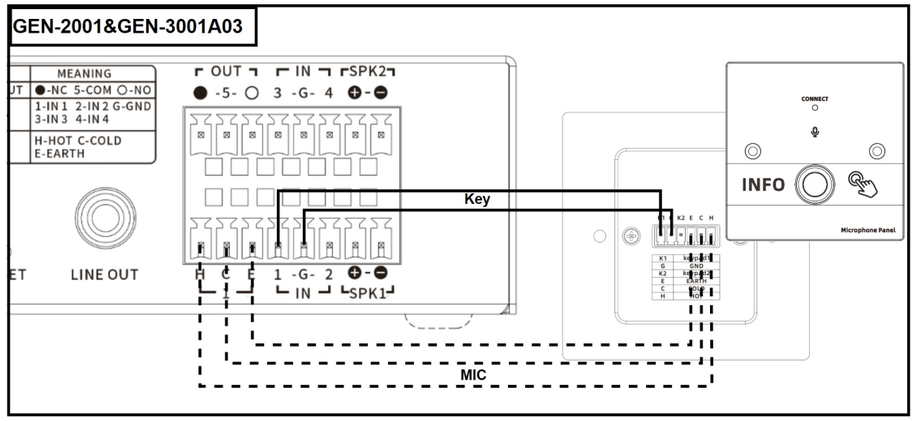

About Microphone Panel Initiated Intercom

When the device initiates intercom through the panel, the following settings are required:

1. Log in to the device WEB page （Default username/password: admin/admin）
2. Modify the【Control-in X】in the【Event】option
3. Set【Action】to【CALL】
4. 【Destination】You can select the protocol of the call:【SIP or NAS】.
5.When the【SIP】protocol is selected, Targets can be set to ID numbers or 2@192.168.1.xxx:5060 format.
6.When the【NAS】protocol is selected, Targets can be set to ID numbers or 192.168.1.xxx:2046 format.

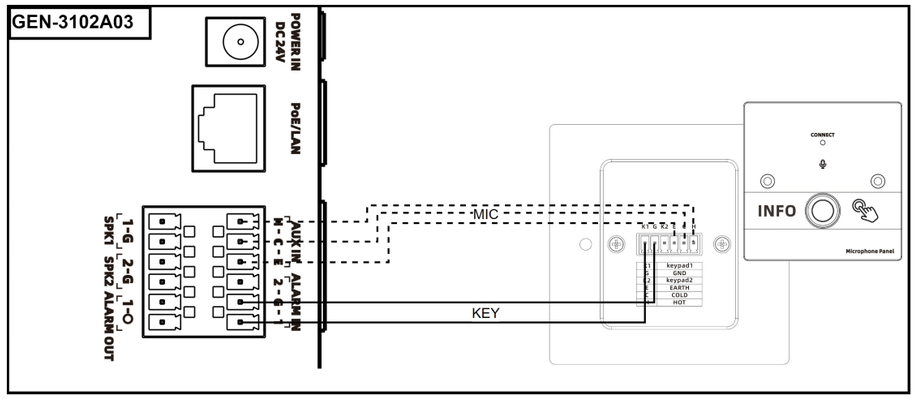

About how to set the call mode of the microphone panel

When you need to set up Intercom Mode, you need to make the following settings:

1. Log in to the device WEB page （Default username/password: admin/admin）
2. Modify the【Other Settings】in the【SIP】or【NAS】option
3. Setting【Intercom Mode】
4. Default:【Half Duplex】;At this time, the call data has a higher priority on the opposite end, and when the opposite end sends valid audio data, the local mic will not transmit audio data.
5.When set to【Full duplex】, two-way intercom is enabled and audio data is transmitted at the same time without interruption

About Microphone Panel Enable

When the device is connected to the panel for use, the following settings are required:

1. Log in to the device WEB page （Default username/password: admin/admin）
2. Modify the【Audio Input Channel】in the【Audio】option
3. Set it to【External Line or MIC】
4. Turn on the【MIC Phantom Power】
5. Click【Save】

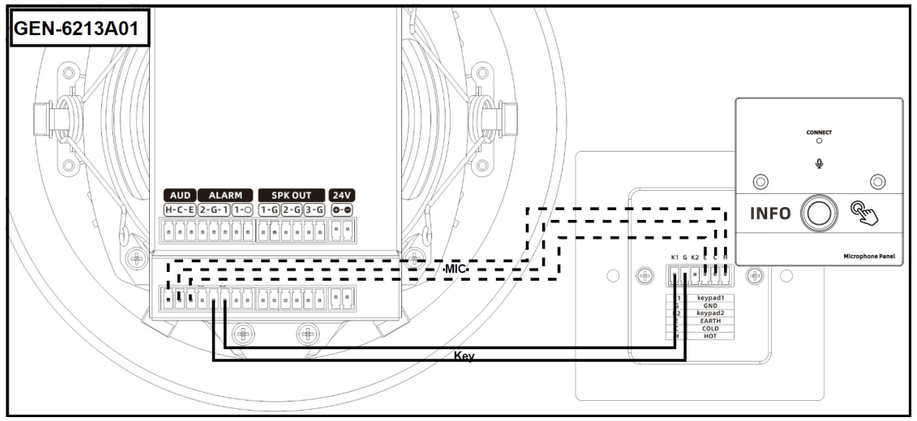

About how the microphone panel answers incoming calls

When you need to set up an auto-answer rule, you need to make the following settings:

1. Log in to the device WEB page （Default username/password: admin/admin）
2. Modify the【Other Settings】in the【SIP】or【NAS】option
3. Setting【Ring time limit rules】
4. Default: 0; if the setting is greater than 0, it indicates how many seconds to answer after ringing.

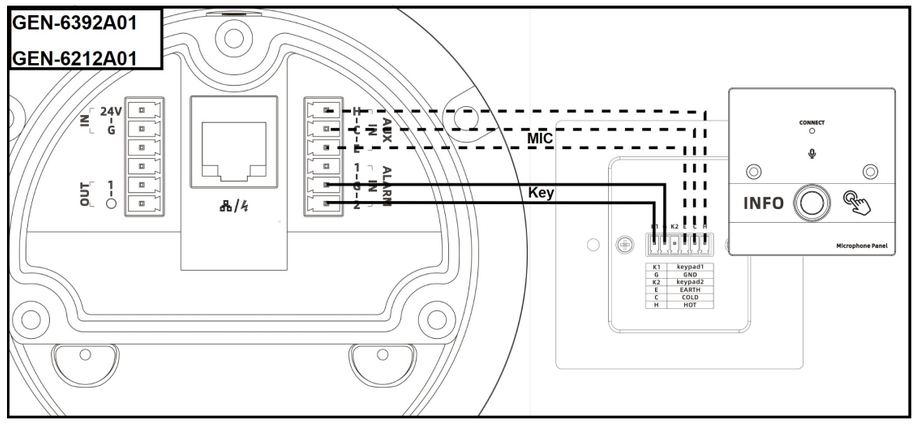

FAQ

◯ Forget IP

- Use ip scanning configuration tool to configure parameters
- Long press the reset button of the device for 5s and then release it, the device will restart automatically after successful reset (IP after reset: 192.168.1.101)

◯ Forgot WEB Password

- Long press the reset button of the device for 5s and then release it, the device will restart automatically after successful reset (Password after reset: admin)

◯ Unable to Log in to the Server

- Check whether the IP of the device and the IP of the server can communicate and whether the network cable is good.
- Check the correctness of the user name or password.
- Check whether the device account has server-related privileges.

◯ Unable to Connect to Bluetooth or Bluetooth Playback Sound Jams

- check whether to open the device Bluetooth function (need to go to the device WEB page to open, the default off)
- Check whether the name of the cell phone connection Bluetooth is correct (you can go to the device WEB page settings)
- equipment and cell phones or other Bluetooth signal is not good, you can try to try to connect in close proximity.

SPON | CHINA

We provide you with more convenient services. Please contact us through the following ways to obtain more information.

Tel:+86 731 8557 0190
Mob/WhatsApp:+86 138 7314 3517
Company Email:inquiry@sponcomm.com
Address:No.70, Nantang Road, High-tech Zone, Changsha, China.

Since 2004, SPON has been a leading IP Audio solution provider in China, initially focusing on education and now serving diverse industries like finance, transportation, and public spaces. Our product portfolio includes IP Public Address Systems, IP Intercom Systems, Digital Conference Systems, and Surveillance Microphone Systems, all adhering to international standards such as 3C, CE, SRRC, ISO 9001, and ISO 14001. At SPON Communications, our mission is to be a globally trusted leader in IP audio solutions, delivering innovative and reliable products that meet customer needs and advance intelligent audio communication.