SPON

WALL SPEAKER
Installation Manual



1.Technical Specifications

General Specification	
Frequency Response	150-15K
Sensitivi	91dB
Rated Power	6W
Power Taps	3W/6W
Line input	100V
Dimension(mm)	177*202*100
Physical Specification	
Material	ABS
Component	5"
Finished Colour	White RAL9016
Unit Weight	0.84kg
Gross Weight	12.7Kg/12pcs
Packing Dimension(cm)	66*40*24
Woofer Speaker Specification	
Voice Coil Size	0.13*2Layer
DC Impedance	6.8Ω
Former	Paper
Magnet	Ferrite
	Φ55*Φ24*12(Y30)
Basket	Iron
Cone Material	Paper
Spider	Cloth
Dust cap	Paper Cup

2. Three View

Unit：mm

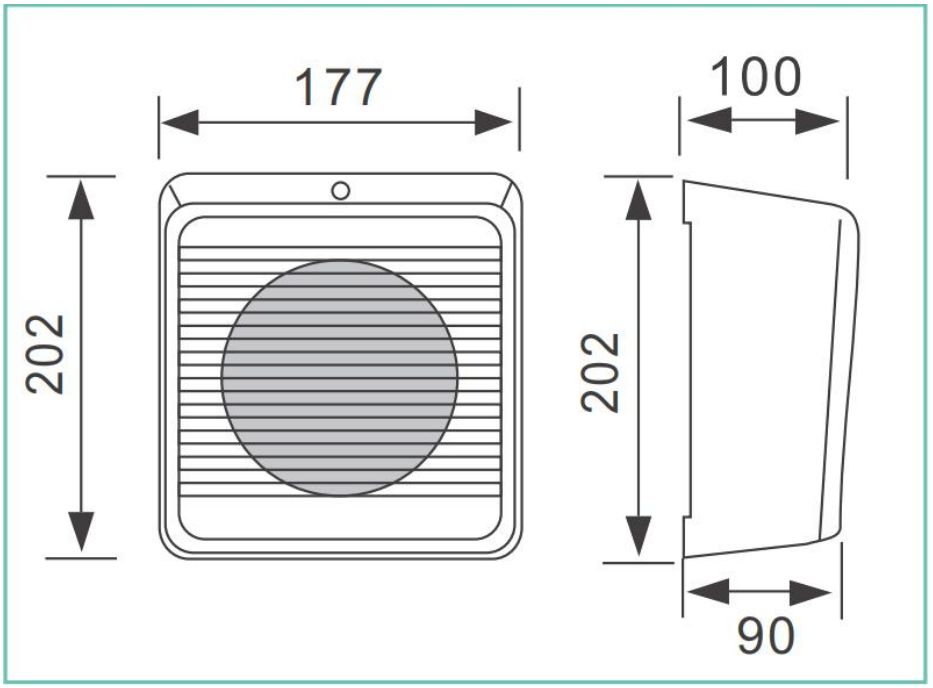

3.Packing list

（1）Wall Speaker 1pcs

（2）Installation Manual 1pcs

（3）Certificate 1pcs

SPON Communications Co., Ltd.
www.sponcomm.com
Service Hotline: +86-731-85570190
Reserve the amendment right without notice

Wechat

V1.0B240304