GEN-6511A02 Network Pendant Speaker





POE | Black Pendant

INTRODUCTION

GEN-6511A02 is a PoE-powered network pendant speaker that supports SIP intercom, VMS integration, and multicast audio streaming. It can handle up to 20 multicast streams and supports local audio storage and playback. With built-in priority management, timer functions, HTTP API-triggered actions, and Bluetooth input, it is ideal for supermarkets, restaurants, gyms, showrooms, and other indoor audio applications.

MAIN FEATURES

- **Multi-Protocol Audio Integration:** Supports SIP, ONVIF, and multicast audio protocols for flexible integration with IP paging systems, VMS platforms, and network audio applications.
- **Local Storage and Scheduled Playback:** Built-in 80 MB local storage supports up to 20 audio files and enables scheduled and loop playback for routine announcements and timed broadcasting.
- **PoE for Easy Deployment:** Supports IEEE 802.3af/at PoE, allowing power and data transmission over a single Ethernet cable for simplified installation.
- **Bluetooth Audio Input:** Equipped with 2.4 GHz Bluetooth input for convenient connection to local wireless audio sources and expanded application flexibility.
- **Pendant Design for Commercial Interiors:** Features a sleek pendant-style design suitable for indoor commercial spaces, combining sound reinforcement with aesthetic integration.

PARAMETERS:

Network Interface	10BASE-T / 100BASE-TX, RJ45
PoE	IEEE 802.3af/at
Network Protocols	TCP/IP, UDP, HTTP, RTP, RTSP, ARP, ICMP, NTP, SIP, ONVIF
Configuration	Web Interface or DevConfig Tool
Audio Transmission	Multicast, up to 20 streams (editable)
Audio Codec	Opus, PCMU (G.711u), PCMA (G.711a), G.722
Audio Stream	WAV (8/16/22/44.1/48 kHz, 8/16-bit, mono/stereo); MP3 (32/44.1/48 kHz, 64–320 kbps, CBR/VBR, mono/stereo)
Audio Storage	80 MB local storage, up to 20 audio files
Audio File Format	WAV, MP3
Bluetooth Input	1 × 2.4 GHz
SNR	⩾90 dB
Speaker Component	5" Woofer + 1" Tweeter
Sensitivity	88 dB (1M/1 W/1KHz)
Max SPL	101 dB (1M/20 W/1KHz)
Amplifier Type	Built-in Class-D Amplifier
Rated Power	15 W (PoE), 20 W (PoE+)
Frequency Response	75 Hz to 20 kHz
Coverage Angle	884 Hz: H230° / V230°; 1.77 kHz: H83° / V83°; 3.54 kHz: H120° / V120°; 7.07 kHz: H150° / V150°
Reset Button	1 × Reset Button
Housing Material	ABS + Iron
Color	Black
Operating Temperature	0°C to +50°C
Operating Humidity	⩽90% RH, non-condensing
Mounting	Ceiling Suspension
Application Environment	Indoor
Dimensions	ϕ193 × 261 mm
Package Dimensions	260 × 236 × 305 mm
Weight	2.1 kg
Warranty	2 Years

ACCESSORIES:

ACCESSORIES	1 × Suspension Rope

CONNECTION DIAGRAM

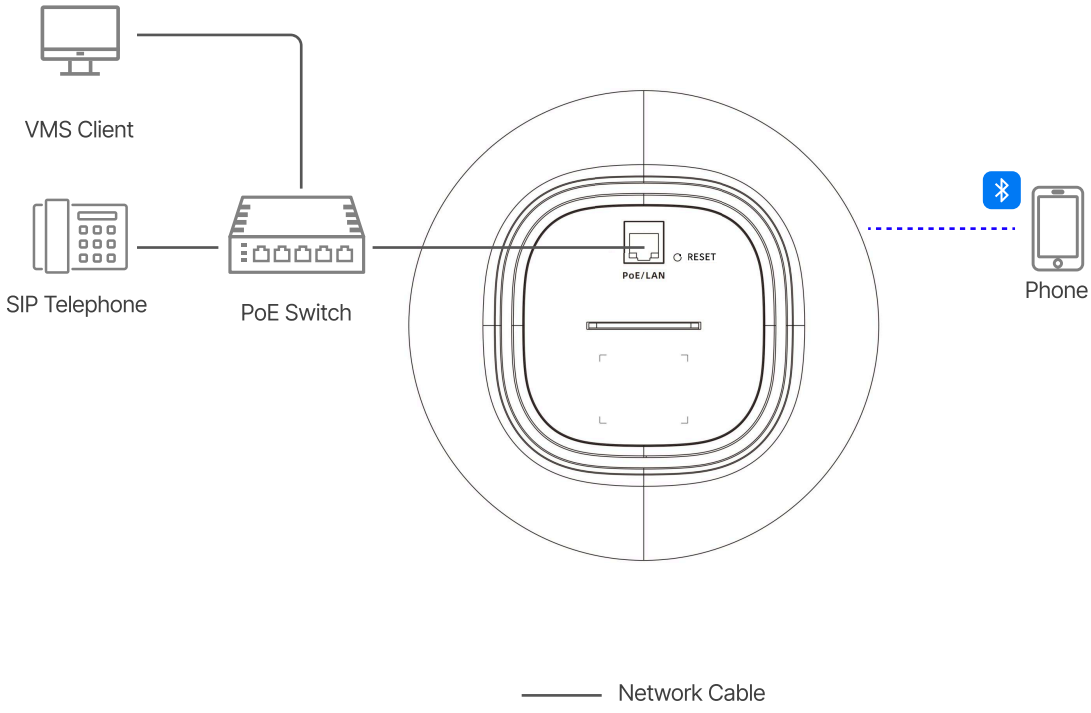

APPLICATION 1

The GEN-6511A02 Network Pendant Speaker supports direct calls from SIP platforms or VMS and allows for the connection of a microphone accessory to extend SIP calling applications. It also features Bluetooth functionality for mobile audio playback, making it ideal for supermarkets, gyms, restaurants and other similar environments.

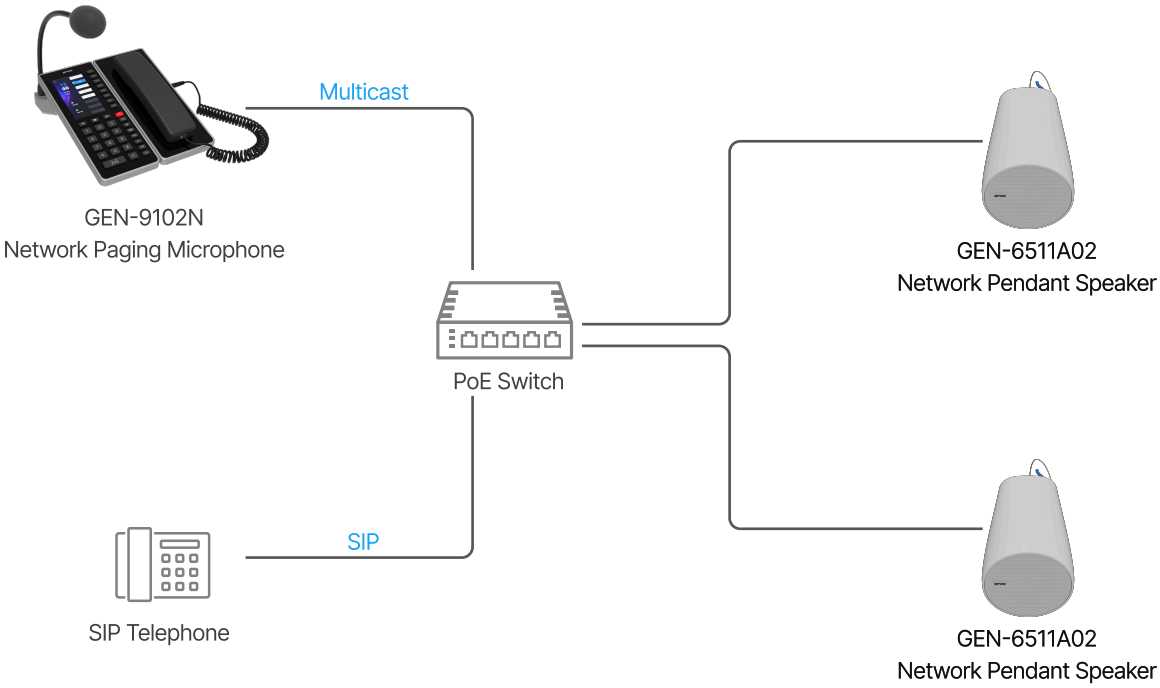

APPLICATION 2

The GEN-6511A02 Network Pendant Speaker supports ONVIF protocol and can be registered to a third-party monitoring system. In an emergency, the operator can directly make a live announcements to the speaker on the monitoring platform.

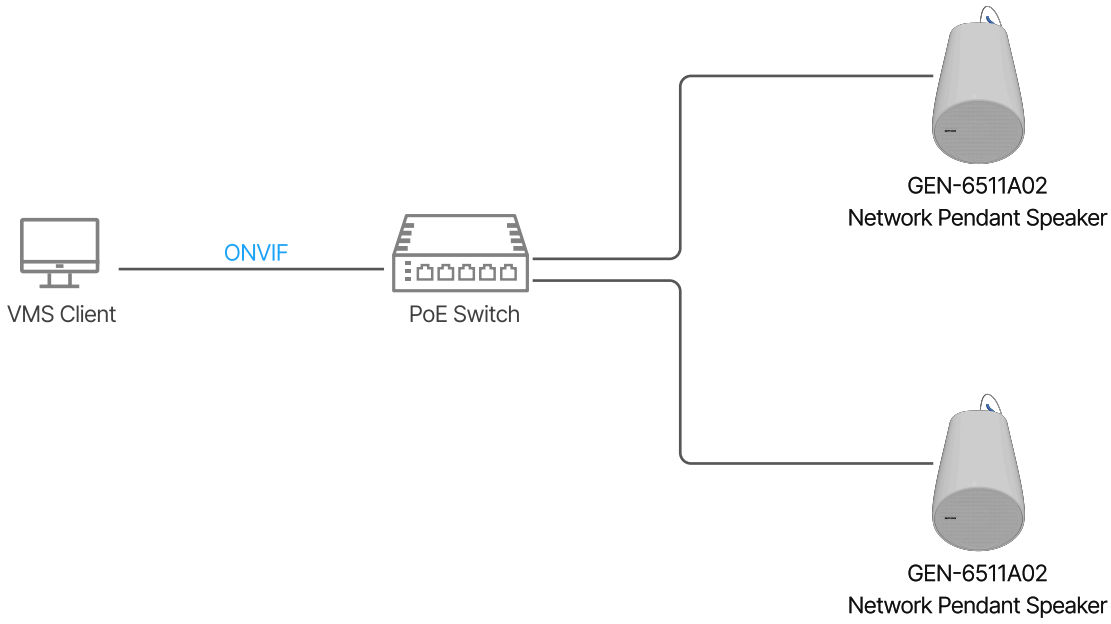

DIMENSION

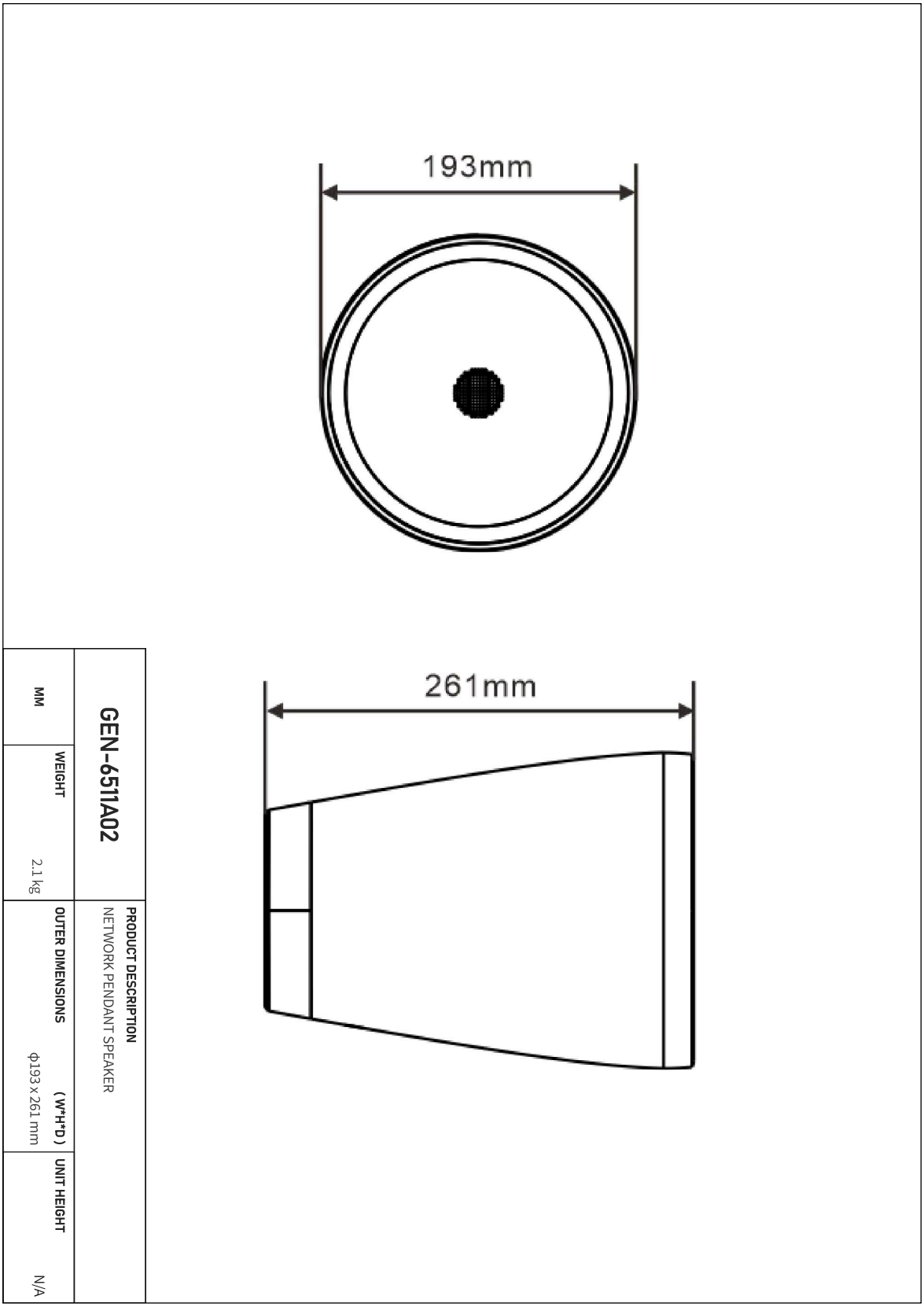
193mm
261mm
GEN-6511A02
PRODUCT DESCRIPTION
NETWORK PENDANT SPEAKER
OUTER DIMENSIONS (W*H*D)
Φ193 x 261 mm
UNIT HEIGHT
N/A
WEIGHT
2.1 kg
MM