NAC-5068B Wireless Microphone





INTRODUCTION

The NAC-5068B is a wireless microphone designed for indoor sound reinforcement applications. It uses 2.4 GHz wireless communication and supports automatic frequency pairing with magnetic proximity calibration. With a compact and lightweight transmitter, built-in battery, magnetic lapel clip, and portable charging case, it is suitable for classrooms, meeting rooms, training rooms, speech reinforcement, and multimedia spaces. It can work with a wireless receiver panel or PA system for voice amplification, teaching, presentations, and broadcast notification applications.

MAIN FEATURES

2.4G Wireless Connection | Portable Charging Dock | Magnetic Pairing

- **2.4 GHz Wireless Transmission:** Uses 2.4 GHz wireless communication with automatic frequency pairing for convenient indoor voice amplification.
- **Magnetic Proximity Pairing:** Supports magnetic proximity calibration with the receiver, allowing quick pairing near the receiver sensing area.
- **Lightweight Wearable Design:** The microphone transmitter weighs about 12 g and supports use with a magnetic lapel clip or lanyard for comfortable wearing.
- **Low-Latency Voice Amplification:** Provides wireless transmission delay of less than 20 ms, suitable for real-time teaching, speech, and meeting applications.
- **Portable Charging Case:** Includes a dedicated charging case with a Type-C charging port for charging, storage, and easy portability.

PARAMETERS:

Communication	2.4 GHz Wireless
Number of Channels	Automatic Frequency Pairing, 78 Channels
Transmit Power	9 dBm
Operating Range	<20 m, LOS under ideal conditions
Delay	<20 ms
SNR	⩾85 dB
Distortion	<1%
Frequency Response	100 Hz–10 kHz
Power Supply	Built-in Battery
Microphone Battery Life	6 h ± 15 min
Microphone Charging Interface	Pogo Pin Charging Contacts
Microphone Dimensions	33 × 35 × 15 mm
Microphone Weight	12 g
Power Control	Automatic Power-On, Manual Power On/Off
Mute Function	Supported
Volume Adjustment	High/Low Volume Level Switching
Mute Function	Supported
Volume Adjustment	High/Low Volume Level Switching
Low Battery Alert	Supported, Slow-Blinking Red Indicator
Charging Case Power Supply	DC 5 V / 500 mA
Charging Case Battery Life	Approx. 9 h
Charging Case Interface	Type-C Charging Port
Charging Case Charging Contacts	Pogo Pin Charging Contacts
Charging Case Indicator	4 × Green Indicators
Charging Time	<2 h
Charging Case Battery Capacity	300 mAh
Charging Case Dimensions	51 × 51 × 27 mm
Operating Environment	Indoor Use; Keep More Than 3 m Away from Wi-Fi Devices and Routers Recommended
Operating Temperature	0 °C–45 °C
Warranty	2 Years
Package Dimensions	95 × 95 × 32 mm

ACCESSORIES

ACCESSORIES	1 × Microphone Transmitter 1 × Charging Case 1 × Magnetic Lapel Clip 1 × Charging Cable 1 × Organizer Bag

CONNECTION DIAGRAM

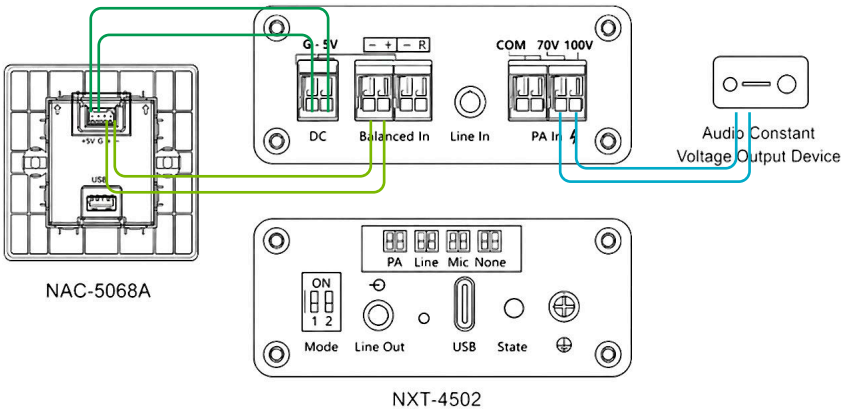

Audio Cable Speaker Cable Power Cable

APPLICATION

The SPON UHF Wireless Microphone Kit NAC-5068A/B can be connected to the Digital Audio Processor NXT-4502 and SPON NXT-3602 Smart Equalized Speaker for wireless speech reinforcement.

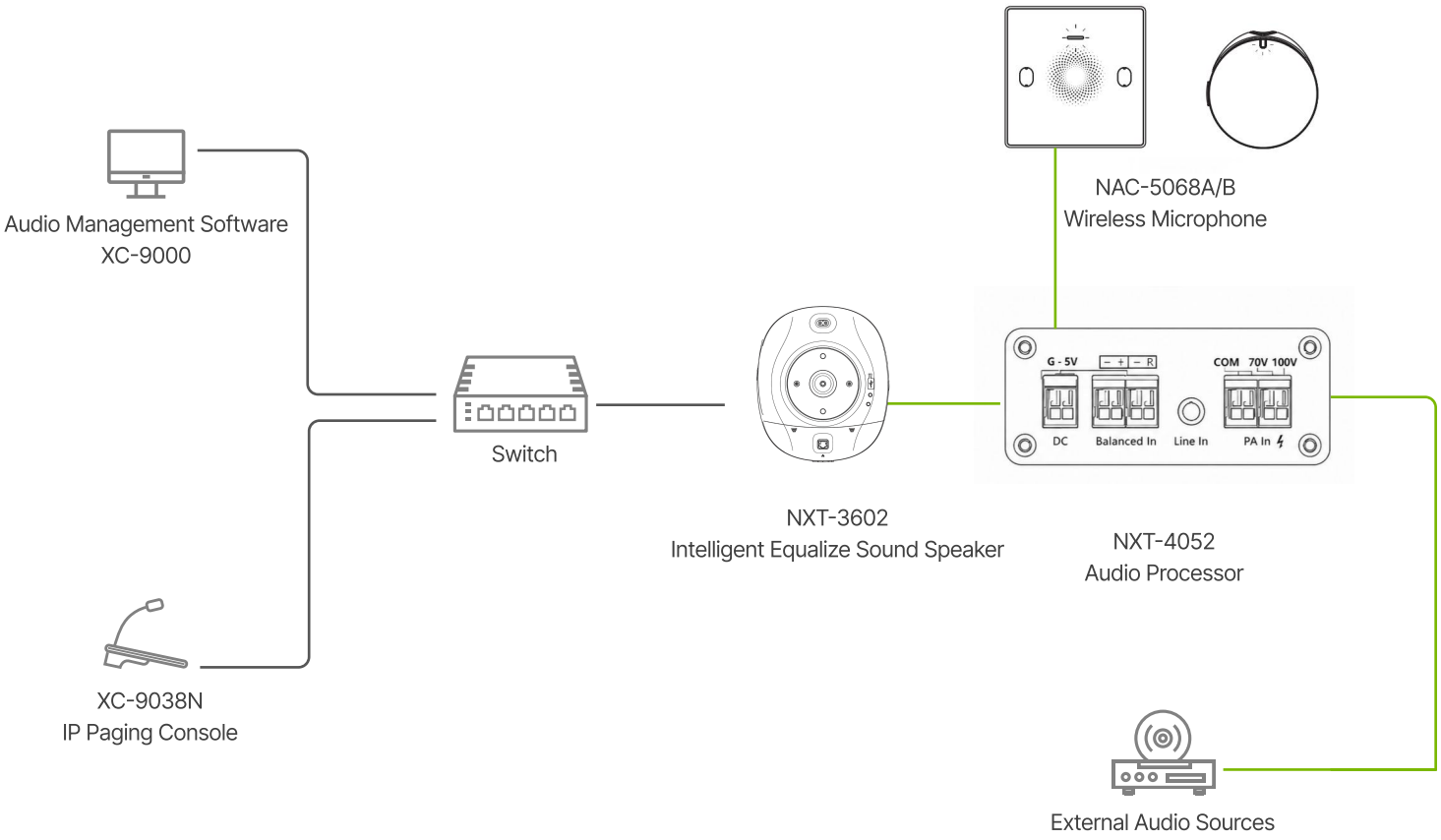

DIMENSION

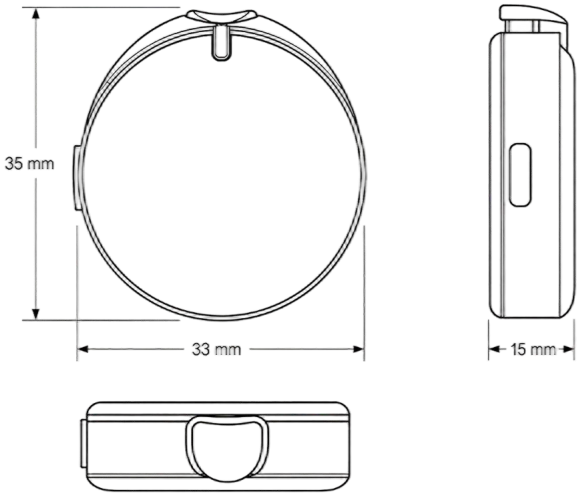

NAC-5068B	WEIGHT	MM
PRODUCT DESCRIPTION	OUTER DIMENSIONS (W*H*D)	UNIT HEIGHT
WIRELESS MICROPHONE	33 × 35 × 15 mm	N/A