GEN-5301P26
Network Integrated Amplifier





SIP Onvif Multicast

INTRODUCTION

SPON Netwrok Integrated Amplifier GEN-5301P26 is an AC-powered network integrated amplifier with a built-in Class-D digital amplifier, supporting 70V/100V constant-voltage output. It can receive SIP calls from telephones or VMS platforms, handle up to 20 multicast streams, and store up to 20 audio files. In addition, it features priority management, timer scheduling, Bluetooth connectivity, and custom actions triggered via HTTP API, making it suitable for schools, shopping malls, campuses, and various indoor public address applications.

MAIN FEATURES

- **Built-in Digital Amplifier:** Features a built-in Class-D digital amplifier with 70V/100V constant-voltage output, including overload and overheat protection.
- **Multiple Audio Inputs:** Provides two line inputs, one balanced microphone input, and Bluetooth audio input for flexible source connection.
- **Network Broadcasting Capability:** Supports up to 20 multicast audio streams and can receive SIP calls for network audio broadcasting.
- **Rich Control Interfaces:** Supports two alarm inputs, one alarm output, and a DC24V EMC output for system integration and linkage control.
- **Local Audio Storage:** Built-in 80 MB audio storage supports web upload and local audio playback.

PARAMETERS:

Network Interface	100BASE-TX, RJ45 Connector
Network Protocols	TCP/IP, UDP, HTTP, RTP, RTSP, ARP, ICMP, NTP, SIP, ONVIF, DHCP
Configuration	Web Interface or DevConfig Tool
Audio Transmission	Multicast, up to 20 streams (editable)
Audio Codec	Opus, PCMU (G.711u), PCMA (G.711a), G.722
Audio File Format	WAV, MP3
Audio Storage	Max 20 audio files, 80 MB
Audio Stream	WAV: 8/16/22/44.1/48 kHz sampling rate, 8/16-bit, mono/stereo MP3: 32/44.1/48 kHz sampling rate, 64–320 kbps, CBR/VBR, mono/stereo
SNR	⩾85 dB
Frequency Response	130 Hz to 18 kHz (±3 dB)
THD+N	<0.1%@1 kHz
Amplifier Type	Class-D
Audio Input Connectors	Line In 1: 1 × 3-Pin Phoenix Connector, Balanced, 500 mV; Line In 2: 1 × 3-Pin Phoenix Connector, Balanced, 500 mV; Mic In: 1 × 6.5 mm TRS, Balanced, 25 mV; Bluetooth: 1 × IPX1 External 2.4G Antenna; Network: 1 × RJ45 Connector
Audio Output Connectors	1 × 4-Pin Phoenix Connector (Power Output); 2 × RCA Jacks (AUX Output)
Audio Output Power	70V/100V: 1 × 260 W
Input Voltage	100V~240VAC, 50/60Hz
Standby Power Consumption	<10 W
Maximum Power Consumption	<310 W
USB:	USB 2.0
Control Input	2, 1 × 3-Pin Phoenix Connector
Control Output	1, 1 × 3-Pin Phoenix Connector
EMC Out	1, DC24V/2A
Accessory (Reserved)	1
Housing Material	Sheet Metal
Color	Gray + Black
Mounting	Desktop, Wall-mounted, Rack-mounted
Application Environment	Indoor
Operating Temperature	0°C to +50°C
Operating Humidity	⩽90% RH, non-condensing
Dimensions	483 × 317 × 44 mm
Package Dimensions	573 × 368 × 123 mm
Net Weight	4.2 kg
Warranty	2 years

ACCESSORIES:

ACCESSORIES	1 × Power Cord (Optional) 1 × 2.4G Rod Antenna 8 × Countersunk Phillips Screw (M3×6) 4 × Foot Pad (FF-7) 2 × Wiring Terminal (3.81mm, 6-pin) 1 × Wiring Terminal (7.62mm, 4-pin) 2 × Hanger 1 × Wiring Terminal (3.81mm, 2-pin)

CONNECTION DIAGRAM

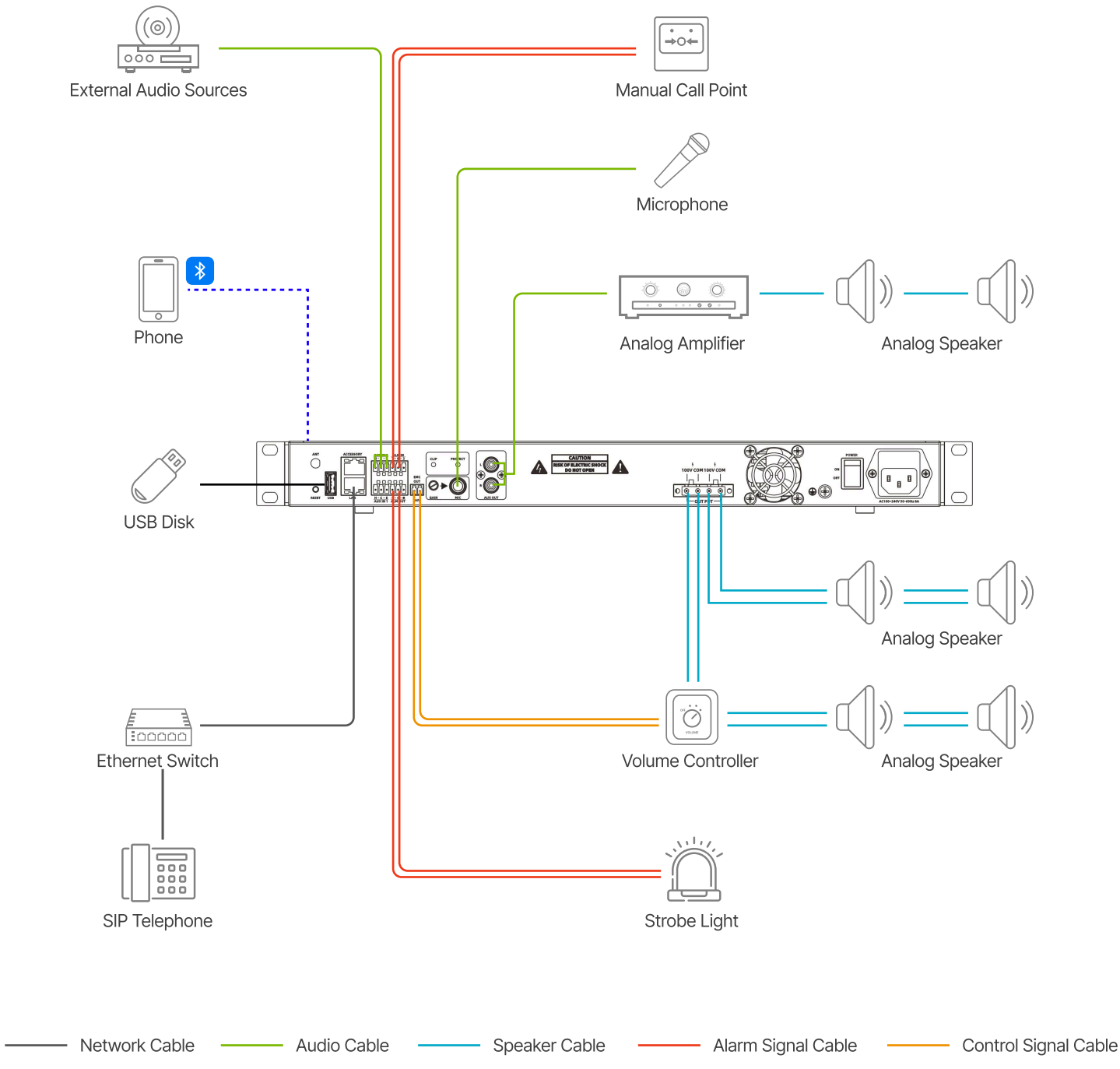

APPLICATION 1

The GEN-5301P26 Network Integrated Amplifier receives audio streams through protocols such as SIP, ONVIF, and multicast, and outputs audio to analog amplifiers or constant-voltage speakers. It supports multiple local audio inputs (microphone, line input, Bluetooth, and USB) for local broadcasting and background music. With a built-in Class-D digital amplifier that offers high efficiency and low heat generation, it is ideal for public address system setups.

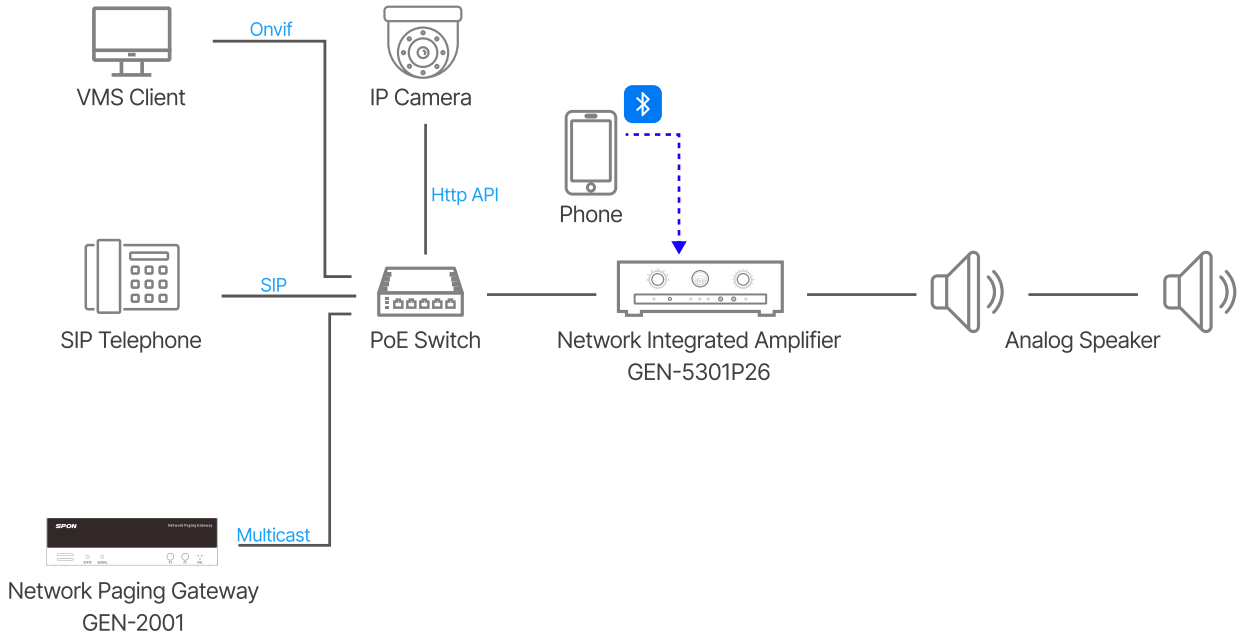

DIMENSION

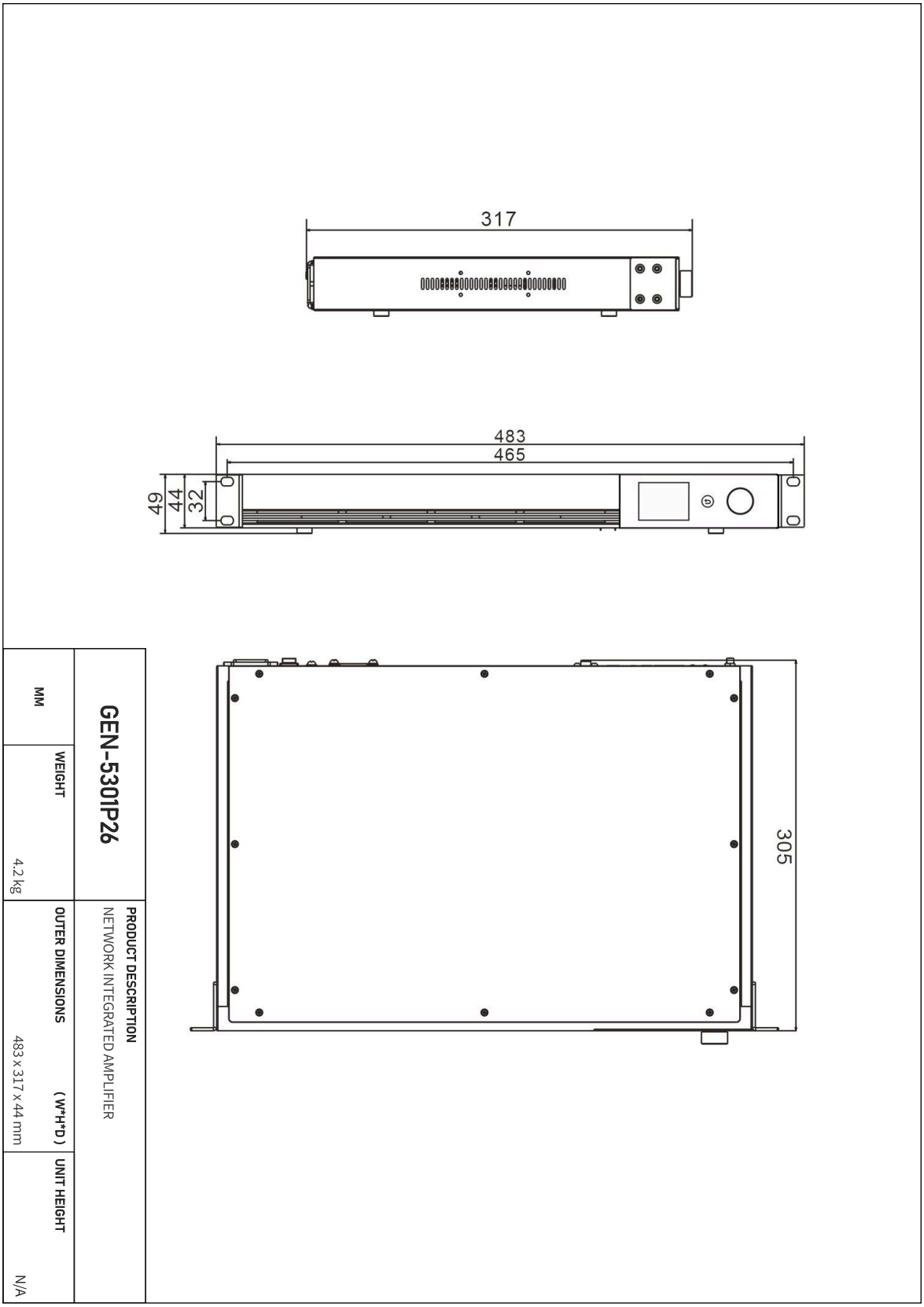

GEN-5301P26	WEIGHT	MM
PRODUCT DESCRIPTION	OUTER DIMENSIONS (W*H*D)	UNIT HEIGHT
NETWORK INTEGRATED AMPLIFIER	483 x 317 x 44 mm	N/A