NAC-2403
Pendant Speaker



70V/100V/8Ω 2-Way Speaker

INTRODUCTION

The NAC-2403 is a pendant speaker with a refined appearance and simple structure. Featuring a 6.5" woofer and 1/2" tweeter, it delivers clear voice reproduction and balanced music performance. It supports 70 V / 100 V line input and 8 Ω low-impedance input, making it suitable for airport lobbies, shopping malls, restaurants, offices, and other indoor spaces.

MAIN FEATURES

- **Two-Way Speaker Design:** Adopts a two-way speaker configuration with a 6.5" woofer and 1/2" tweeter for clear voice reproduction and balanced music performance.
- **Flexible Input Options:** Supports 70 V / 100 V line input and 8 Ω low-impedance input for flexible system integration.
- **Elegant Pendant Installation:** Features a refined appearance and pendant-mounted design, suitable for airport lobbies, shopping malls, restaurants, offices, and other indoor spaces.

PARAMETERS:

Frequency Response	90 Hz~20 kHz
Sensitivity	86 dB ± 3 dB (1 m / 1 W)
Max. SPL	104 dB (1 m / 60 W)
Rated Power	60 W
Power Taps (100 V)	60 W / 30 W / 15 W / 7.5 W
Power Taps (70 V)	60 W / 30 W / 15 W / 7.5 W / 3.8 W
Low-Impedance Input	8 Ω
Rated Impedance	167 Ω (60 W) / 333 Ω (30 W) / 667 Ω (15 W) / 1.33 kΩ (7.5 W) / 1.29 kΩ (3.8 W, 70 V)
Input Voltage	70 V / 100 V
Speaker Design	Two-way speaker
Speaker Component	6.5" woofer × 1 + 1/2" tweeter × 1
Housing Material	ABS + aluminum mesh
Color	White
Mounting	Pendant-mounted
Application Environment	Indoor
Operating Temperature	-25°C to +55°C
Operating Humidity	≤95% RH, non-condensing
Dimensions	Φ226 × 224 mm
Package Dimensions	325 × 270 × 270 mm
Weight	3.12 kg
Warranty	2 years

DIMENSION

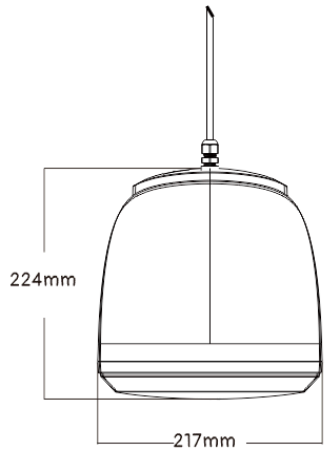

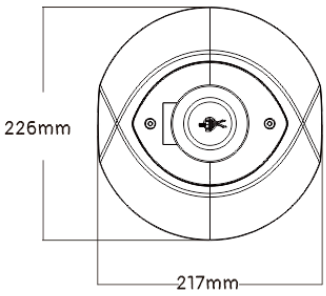

NAC-2403	WEIGHT	MM
PRODUCT DESCRIPTION: PENDANT SPEAKER	3.12 kg	
	OUTER DIMENSIONS (W*H*D)	UNIT HEIGHT
	Φ226 × 224 mm	N/A