SPON

DIGITAL MIXER AMPLIFIER
User Manual

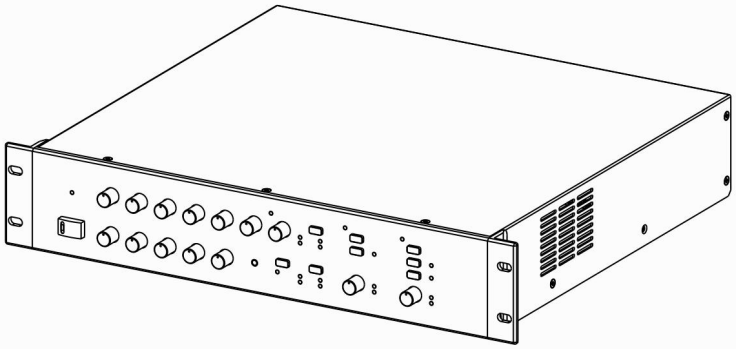

IP PUBLIC ADDRESS SYSTEM

Interface Description

Front Panel

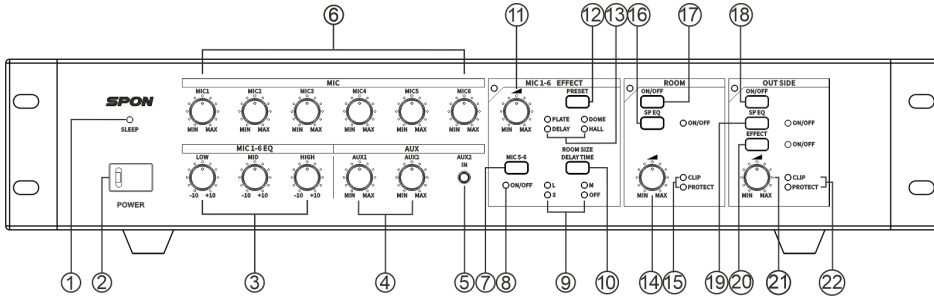

① SLEEP light

② Power switch

③ MIC1-6EQ adjusting knob: support low, mid and high tone adjustment.

④ AUX1 and AUX2 input volume adjustment knob.

⑤ AUX2 input interface: 1000mv, 10kΩ, mixing mono, non-equilibrium, 3.5mm input interface.

⑥ MIC1-6 input volume adjustment knob

⑦ MIC5-6EFFECT function on/off button

⑧ MIC5-6EFFECT function indicator light(ON: indicator light on, OFF: indicator light off)

⑨ Indoor Reverberation/Time-delay mode(L,M,S,OFF) selection indicator light

⑩ Reverberation/delay mode switch button

⑪ EFFECT fine-tuning knob

⑫ Preset mode switch button

⑬ Preset mode(PLATE、DOME、DELAY、HALL)selection indicator light

⑭ Indoor ROOM power amplifier channel output volume adjustment knob

⑮ Indoor ROOM power amplifier channel overload light and protect light

⑯ Indoor ROOM power amplifier channel EQ on/off button and indicator light(ON: indicator light on, OFF: indicator light off)

⑰ Indoor ROOM power amplifier channel on/off button

⑱ Outdoor OUTSIDE power amplifier channel on/off button

⑲ Outdoor OUTSIDE power amplifier channel EQ on/off button and indicator light (ON: indicator light on, OFF: indicator light off)

⑳ Outdoor OUTSIDE power amplifier channel EFFECT on/off button and indicator light(ON: indicator light on, OFF: indicator light off)

㉑ Outdoor OUTSIDE power amplifier channel output volume adjustment knob.

㉒ Outdoor OUTSIDE power amplifier channel overload light and protect light

Back Panel

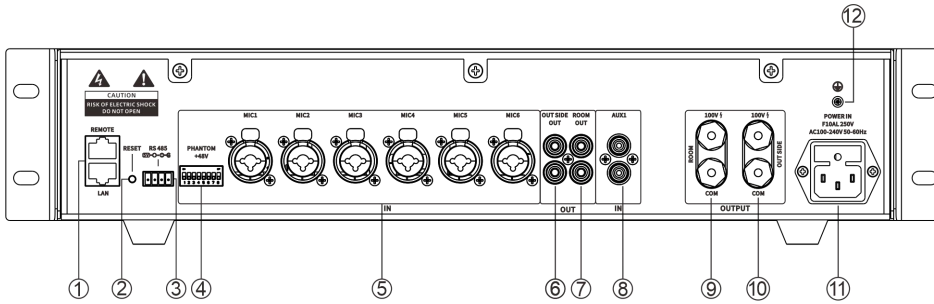

① UP: network interface; Down: control interface, connect to remote controller.

② Reset button: long press and hold it for 5 seconds to restore device to factory Settings.

③ Serial Port:Reserved.

④ 48V Phantom power switch: 1-6 separately control the MIC1-6 channel phantom power, 7-8 reserved.

⑤ MIC input interface:XLR-3-31 or 6.3mm input interface.

⑥ Power amplifier OUTSIDE expansion output interface

⑦ Power amplifier ROOM expansion output interface

⑧ Line AUX1 input interface: 500mv, 10 kΩ, non-equilibrium, RCA input interface.

⑨ ROOM power amplifier output interface: 100V, 240W.

⑩ OUTSIDE power amplifier output interface: 100V, 240W.

⑪ Power interface

⑫ Ground terminal

Digital Mixer Amplifier Configuration

Login web Interface

(1)Please enter the IP address of digital mixer amplifier to the address bar of web browser(the default IP address is 192.168.1.101), then press enter.

(2)Enter the username and password in the web page login window (the default username and password are both admin).

Note: please refer to the user manual for more detailed information.

Appearance Installation Dimension Diagram (unit: mm)

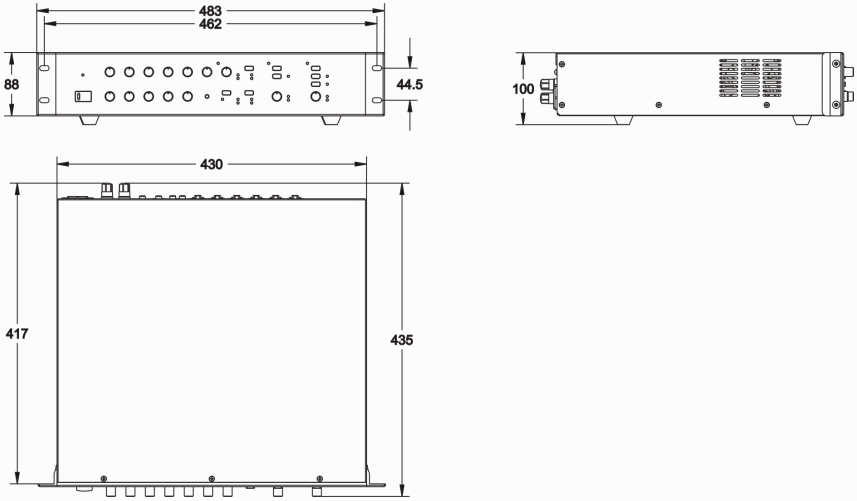

Specification

Power	AC100~240V/50Hz /10A
Rated output power	2*240W(100V 42Ω)
Standby power consumption	<15W
MIC input	MIC1-MIC6 sensitivity/impedance/SNR(Signal to Noise Ratio): -50dB / 600Ω / ≥60dB Support 48V phantom power supply
AUX input	AUX1 sensitivity/impedance/SNR(Signal to Noise Ratio): 500mv/10KΩ/82dB non-equilibrium signal AUX2 sensitivity/impedance/SNR(Signal to Noise Ratio): 1000mv/10KΩ/82dB non-equilibrium signal
Frequency response	70Hz~18kHz（±3dB）
THD (total harmonic distortion)	≤1%(1kHz ,1/3 rated power)
Audio sampling rate	48kHz, 16bit
Operating temperature	-10～50℃
Operating humidity	<90%RH(non condensing)

Packing List



Power cord 1pcs (3*1.0mm²/1.5m) **(Optional)**



Hanger 2pcs



Washer head cross screw 4pcs(M4*8)



Installation instructions 1pcs



Certification 1pcs

SPON Communications Co., Ltd.
www.sponcomm.com
Service Hotline: +86-731-85570190
Reserve the amendment right without notice

V1. 0B240528