NXT-3602
Intelligent Equalize Sound Speaker





INTRODUCTION

NXT-3602 is a network equisound speaker that integrates network broadcasting, audio amplification, Bluetooth connectivity, and multi-channel mixing. With a dual-arc acoustic design, advanced audio processing, and DSP tuning capability, it delivers more even sound coverage and improved speech intelligibility. It supports both web-based and mobile app management, and optional network broadcast module expansion, making it suitable for meetings, teaching, and various indoor public address applications.

MAIN FEATURES

- **Flexible Installation and Audio Connectivity:** Supports ceiling or bracket mounting for different environments, and provides a standard 3.5mm line input and 3.5mm line output for external audio sources or system expansion.
- **Dual-Arc Acoustic Design and Spatial Equalization:** Adopts a dual-arc acoustic structure to optimize directional sound coverage, reduce spatial interference, and improve listening consistency.
- **DSP Audio Processing:** Built-in DSP processor enables precise audio tuning and flexible sound optimization through multi-band EQ adjustment.
- **Comprehensive Control and Broadcast Management:** Supports both web-based and mobile app management for device control, daily broadcasting, scheduled broadcasting, and emergency public address functions.
- **Dual Wireless Microphones and Multi-Channel Mixing:** Supports dual wireless microphones, Bluetooth 5.0 wireless connectivity, and multi-channel mixing for meetings, teaching, and daily sound reinforcement applications.

PARAMETERS:

Network Interface	10BASE-T/100BASE-TX, RJ45 Connector
Network Protocols	TCP/IP (IPv4), UDP, HTTP, NAS, MQTT
Configuration	Web Interface
Audio Codec	MP3, PCM, ADPCM
Sensitivity	86dB ±6dB
Max. SPL	100dB ±3dB
SNR	⩾85dB
Audio Sampling Rate & Bit Depth	48kHz, 16-bit
Frequency Response	100Hz–16kHz
Rated Output Power	30W (Treble), 120W (Bass)
Power Supply	AC100V–220V, 50/60Hz
Standby Power Consumption	⩽7W
Mounting	Ceiling Mount
Installation Environment	Dry Indoor Locations Only
Operating Temperature	0°C to +55°C
Operating Humidity	10%–90% RH, Non-Condensing
Panel Material	ABS+PC
Grille Material	Polyester Fiber
Color	Silver Gray (Grille), White (Panel)
Dimensions	235 × 200 × 205 mm
Package Dimensions	280 × 240 × 280 mm
Weight	2.5 kg
Warranty	2 Years

ACCESSORIES:

ACCESSORIES	1 × Extendable Hanging Bracket 1 × Power Cable 2 × Half-Round Head Cross Self-Tapping Screws 3 × Countersunk Head Cross Self-Tapping Screws 3 × Anti-Fall Safety Ropes 5 × Plastic Expansion Sleeves

CONNECTION DIAGRAM

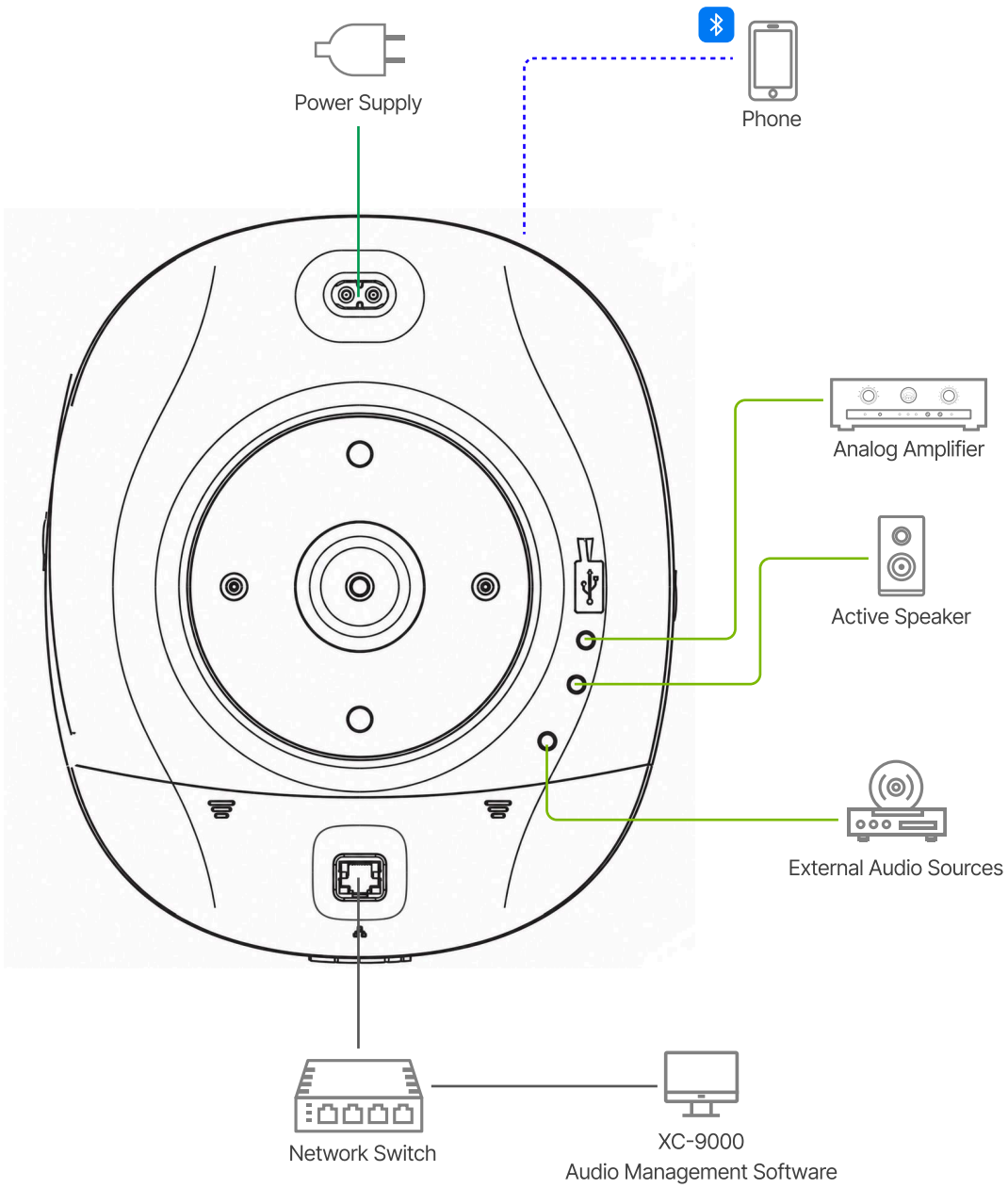

APPLICATION 1

Network Equisound Speaker NXT-3602 can receive broadcasting from SPON Management Software XC-9000, IP Paging Console XC-9038N and XC-APP application, also it can receive one-way SIP calling via SIP trunk from a third-party SIP PBX.

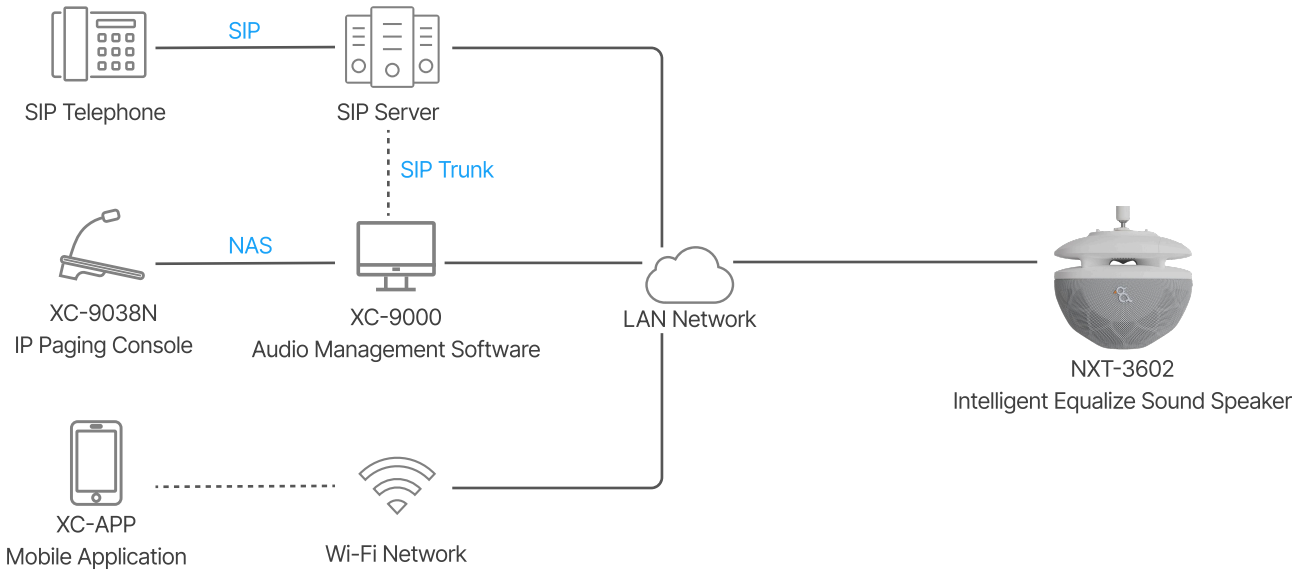

APPLICATION 2

Network Equisound Speaker NXT-3602 can work with SPON Cloud PA System for receiving real-time broadcast or timed broadcasting from iPad application or mobile application.

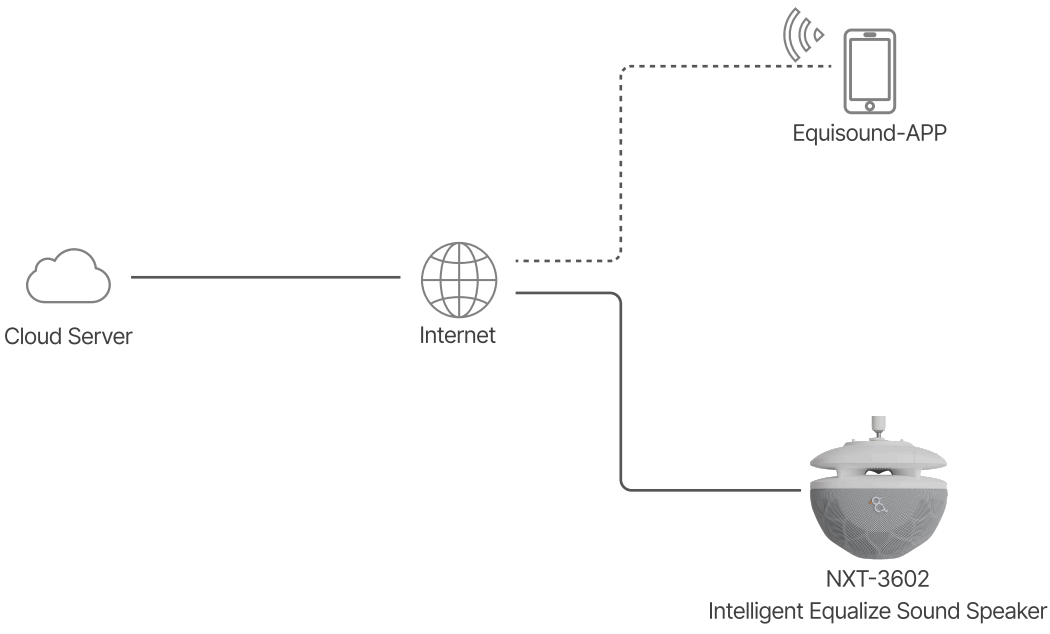

DIMENSION

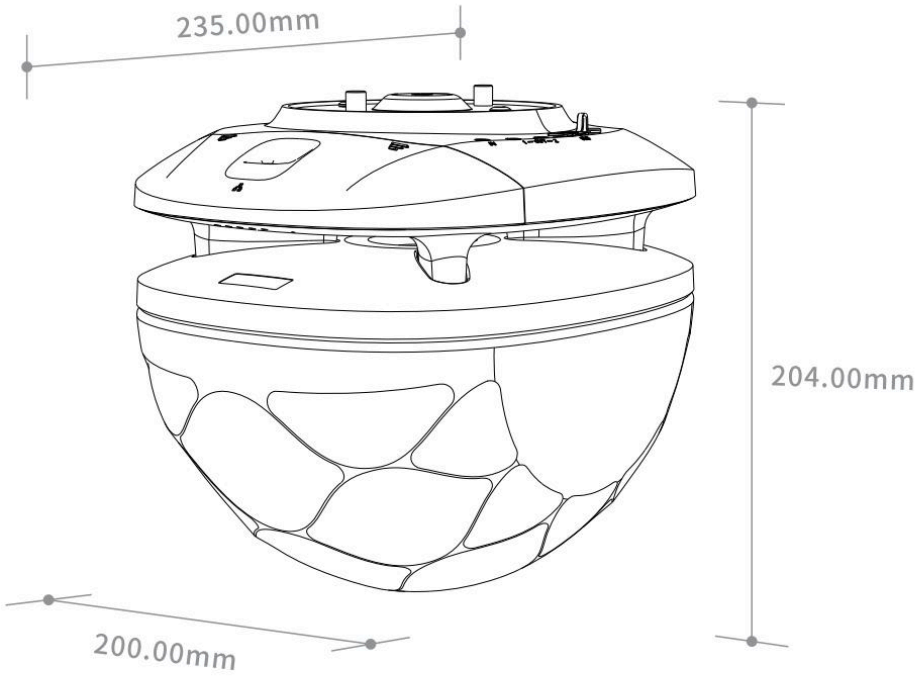

NXT-3602	WEIGHT	MM
PRODUCT DESCRIPTION	OUTER DIMENSIONS (W*H*D)	UNIT HEIGHT
INTELLIGENT EQUALIZE SOUND SPEAKER	235 x 200 x 205 mm	N/A