# NAC-132
# Ceiling Speaker

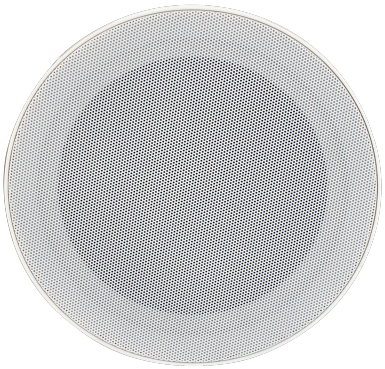

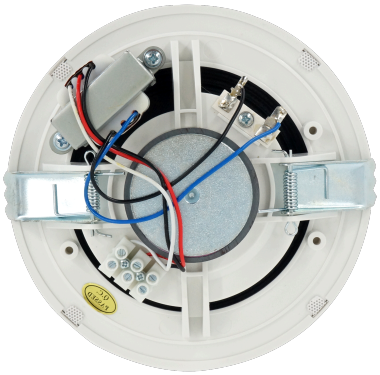

100V Fixed Voltage

Full-Range Speaker

## INTRODUCTION

The NAC-132 is a stylish ceiling speaker with a minimalist design and high-strength ABS housing. It delivers clear sound reproduction and is suitable for airport halls, shopping malls, offices, and other indoor commercial environments.

## MAIN FEATURES

- **Compact Full-Range Design:** Adopts a 5" full-range speaker unit for clear and natural sound reproduction in a compact form factor.
- **Minimalist Appearance:** Features a clean and stylish design with high-strength ABS housing, suitable for modern indoor spaces.
- **Easy Ceiling Installation:** Equipped for convenient ceiling mounting in airport halls, shopping malls, offices, and other indoor commercial environments.

## PARAMETERS:

| | |
|---|---|
| Frequency Response | 70 Hz~15 kHz |
| Sensitivity | 88 dB ± 3 dB (1 m / 1 W) |
| Max. SPL | 96 dB (1 m / 6 W) |
| Rated Power | 6 W |
| Power Taps (100 V) | 6 W / 3 W |
| Rated Impedance | 3.3 kΩ (3 W) / 1.7 kΩ (6 W) |
| Input Voltage | 100 V |
| Speaker Design | Full-range speaker |
| Speaker Component | 5" full-range speaker unit |
| Housing Material | ABS |
| Grille Material | Powder-coated iron mesh |
| Color | White |
| Mounting | Ceiling-mounted |
| Application Environment | Indoor |
| Operating Temperature | -25°C to +55°C |
| Operating Humidity | ≤95% RH, non-condensing |
| Cutout Dimension | Φ140 mm |
| Dimensions | Φ160 × 54 mm |
| Package Dimensions | 178 × 63 × 178 mm |
| Weight | 0.5 kg |
| Warranty | 2 years |

## DIMENSION

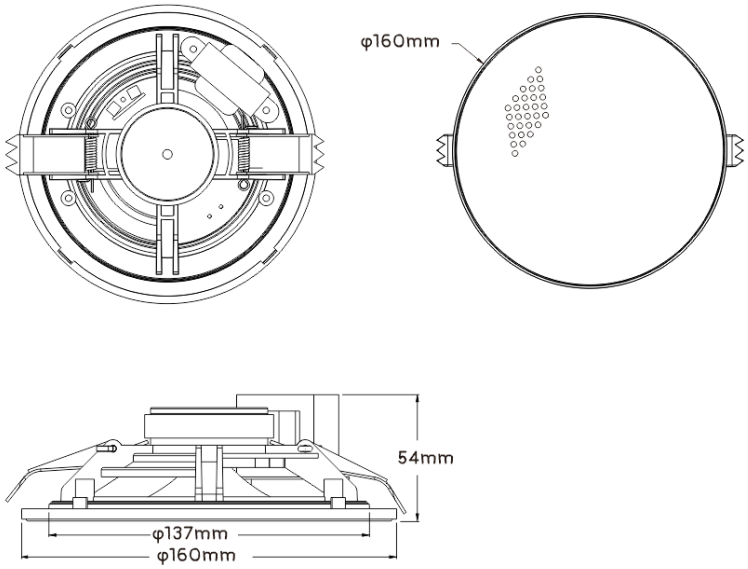


| | |
|---|---|
| NAC-132 | |
| PRODUCT DESCRIPTION | CEILING SPEAKER |
| OUTER DIMENSIONS ( W*H*D ) | Φ160 × 54 mm |
| UNIT HEIGHT | N/A |
| WEIGHT | 0.5kg |
| MM | |