GEN-6191A12 Network Column Loudspeaker





INTRODUCTION

GEN-6191A12 is an AC-powered wall-mounted network speaker that supports SIP and VMS calls, up to 20 multicast streams, storage for 20 audio files, priority management, scheduled playback, and HTTP API-triggered custom event actions for factories, urban infrastructure projects, and similar applications.

MAIN FEATURES

- **Multi-Source Audio Reception:** Supports reception of SIP audio, ONVIF audio, Bluetooth audio, and multicast streams.
- **Local Audio Storage:** Built-in 80 MB local storage for up to 20 WAV/MP3 audio files.
- **Alarm Trigger Input:** Provides one control input for direct triggering of local alarm audio files.
- **Two-Way Communication:** Built-in microphone supports two-way communication.
- **HTTP API Trigger:** Supports HTTP API for triggering local file playback.
- **IPX5 Protection:** Features an aluminum housing with an IPX5 protection rating.
- **Scheduled Playback:** Built-in scheduler for timed playback of local audio files.
- **AC Power Supply:** Comes with a built-in power cable and supports AC 220 V power supply.

PARAMETERS:

Network Interface	10/100Base-TX, RJ45
Power Input	1 × AC 110–240 V
Network Protocols	TCP/IP, UDP, HTTP, RTP, RTSP, ARP, ICMP, NTP, SIP, ONVIF, DHCP
Configuration	Web interface or DevConfig Tool
Audio Transmission	Multicast, up to 20 streams (editable)
Audio Codec	Opus, PCMU (G.711u), PCMA (G.711a), G.722
Audio File Format	WAV, MP3
Audio Storage	80 MB local storage, up to 20 audio files
Audio Stream	WAV 8/16/22/44.1/48 kHz, 8/16-bit, mono/stereo; MP3 32/44.1/48 kHz, 64–320 kbps, CBR/VBR, mono/stereo
Audio Input	1 × 500 mV
Bluetooth Input	1 × 2.4 GHz
Frequency Response	100 Hz to 15 kHz
SNR	⩾90 dB
Amplifier	Built-in Class-D amplifier
Rated Power	120 W
Speaker Component	4 × 4.5" full-range speaker units + 1 × 2.5" tweeter unit
Sensitivity	90 dB (1 m / 1 W / 1 kHz)
Max. SPL	107 dB (1 m / 120 W / 1 kHz)
Control Input	1
Reset Button	1
Microphone	Electret condenser microphone
Directionality	Omnidirectional
Microphone Installation	Built-in
Microphone Sensitivity	-45 ± 3 dB
Microphone SNR	58 dB
Max. Input Sound Level	110 dB (THD < 1%)
Housing Material	Aluminum alloy, iron mesh
IP Rating	IPX5
Color	Silver Gray
Mounting	Wall-mounted
Application Environment	Outdoor
Operating Temperature	-10°C to +55°C
Operating Humidity	⩽90% RH, non-condensing
Dimensions	916 × 140 × 130 mm
Package Dimensions	1090 × 225 × 198 mm

PARAMETERS:

Weight	6.85 kg
Warranty	2 Years

ACCESSORIES:

ACCESSORIES	1 × Bracket 3 × Outer Hexagon Flange Bolt (M8×14, 304) 2 × Bracket 1 × Connection Terminal (3.5mm, 4-pin) 1 × Self-Locking Nut (M8, 304)

CONNECTION DIAGRAM

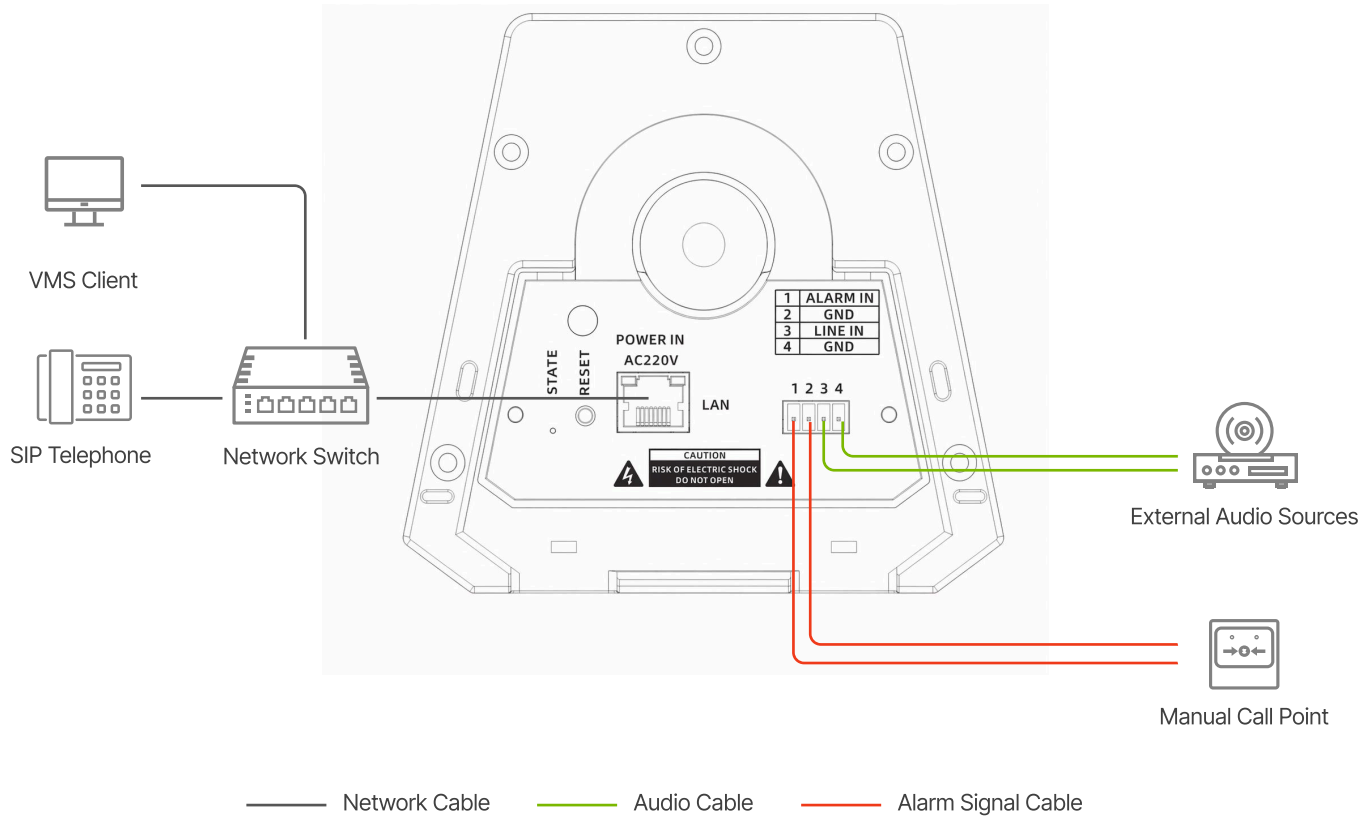

APPLICATION 1

The GEN-6191A12 Network Column Speaker supports direct SIP or VMS calls, with a built-in microphone for two-way communication. Its compact design includes I/O control interfaces for camera and alarm integration, plus an audio input for display screen amplification, making it ideal for smart pole construction.

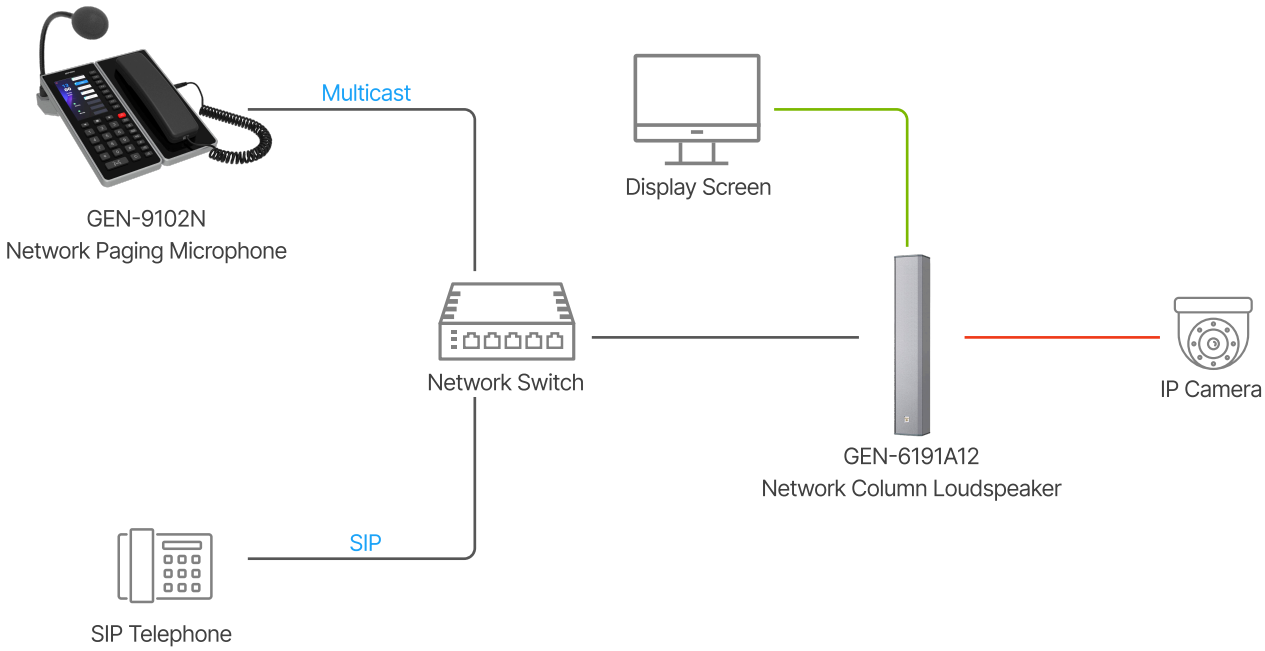

APPLICATION 2

The Network Column Speaker GEN-6191A12 supports ONVIF protocol and can be registered to a third-party monitoring system. In an emergency, the operator can directly make a live announcements to the speaker on the monitoring platform.

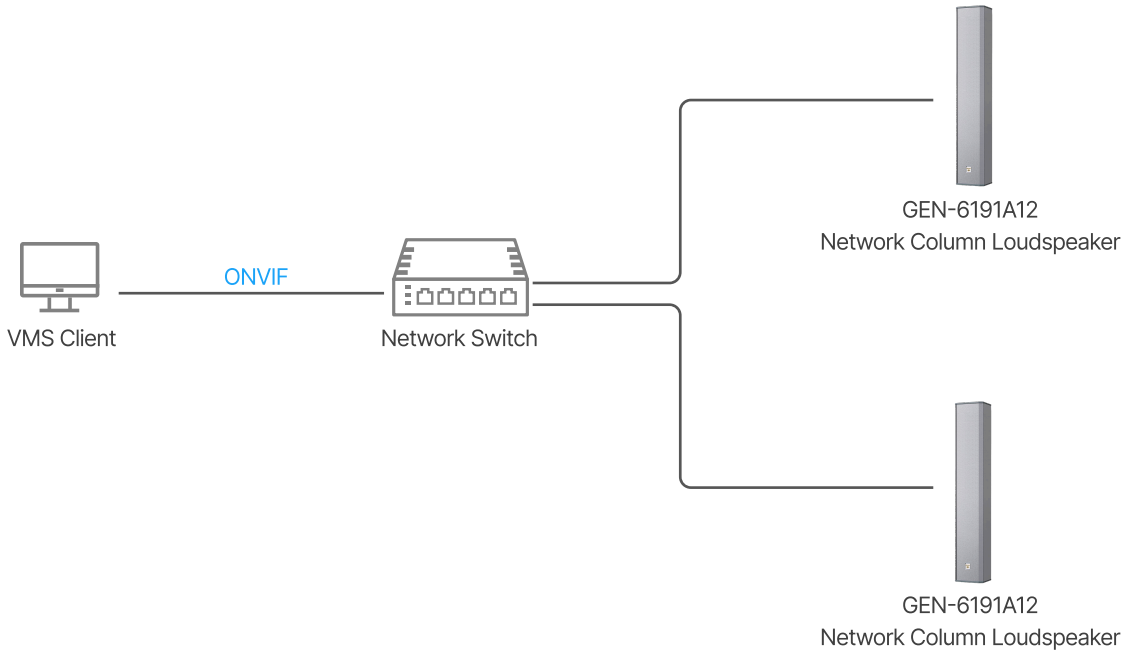

DIMENSION

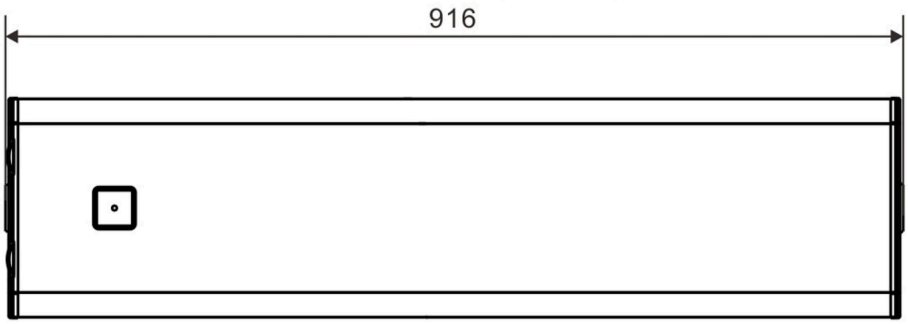

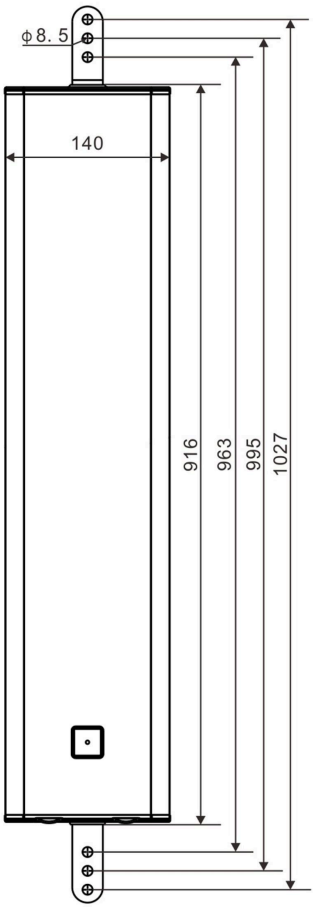

GEN-6191A12	WEIGHT	OUTER DIMENSIONS (W*H*D)	UNIT HEIGHT	MM [INCH]
PRODUCT DESCRIPTION	6.85 kg	916 x 140 x 130 mm	N/A	
NETWORK COLUMN LOUDSPEAKER				