SPON

CEILING SPEAKER
Installation Manual



1. Summary

(1) The full-range ceiling speaker adopts composite speaker drum paper so that the sound quality is clear. With the powerful active clamp, it is convenient to install. Composite cantilever and damping treatment can prolong the service life of the horn.

(2)The full-range ceiling speaker can directly connect to the amplifier 100V circuit line output. The connectors of its 100V amplifier primary winding can help users realize the multiple powers for choice.

2. Specification, Functional Parts and Parameters

Electricity	Speaker unit	6 inch paper cone speaker
	Rated power（PHC）	6W
	Sensitivity （1KHz,1M）	93dB±3 dB
	Effective frequency range（-10dB）	100-15KHz
	Rated voltage	100V
	Input interface	Terminal blocks
	Terminal block color	black, white, red
Finished product	Product size	φ188mm x 76mm
	Opening size	φ170mm
	Product N W	520g
	Installation	Ceiling mount
Material	Shell	White ABS
	Mesh	White metal mesh paint
Environment	Working temperature	-25℃ to +55℃
	Storage Humidity	-40℃ to +70℃
	Relative Humidity	< 95%

3. Size Picture

Unit: mm

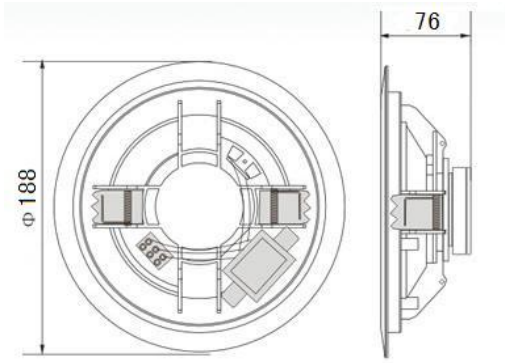

4. Circuit Diagrams

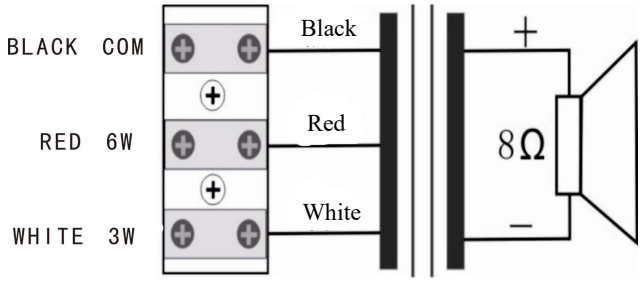

Wiring description:

amplifier COM need to be connected to the black terminal, amplifier 100V should connect to the corresponding terminal.

With 6W rated power: amplifier COM need to be connected with black line, amplifier 100V connect with red line.

With 3W rated power: amplifier COM need to be connected with black line, amplifier 100V connect with red line.

5. Installation Instruction

 1.Make a hole onthe ceiling	 2.Aim the speaker hole and openthespringclip.	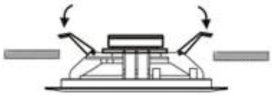 3.Push it upward, and flat close to the ceiling surface.

6. Fault maintenance

Fault phenomenon	Fault reason & exclude
After finishing installation of horn speaker, the sound is small even no sound	Check if the wiring of horn speaker is correct, tight and no shorting. With the power selection, please confirm if the power switch has been adjusted to the right position. (in addition, wiring should be left with some certain margin to avoid the horn internal wiring damage.
After finishing installation of horn speaker, the sound quality is not good and there is noise.	Check if the input signal source of amplifier and input transmission joint is correct. In addition, the horn speaker should be tightly fixed, otherwise, the resonance will be generated which can result in bad sound quality.

Product Implementation Standard

Q/JSPTX 003-2024

7. Packing List

(1)Installation Manual 1 PC

(2) Ceiling Speaker 1PC

(3) Warranty Cards and Certificate 1 PC