NAC-133
Ceiling Speaker



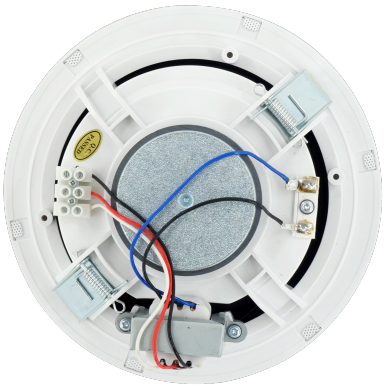

100V Fixed Voltage

Full-Range Speaker

INTRODUCTION

The NAC-133 is a stylish ceiling speaker with a minimalist design and high-strength ABS housing. It delivers clear sound reproduction and is suitable for airport halls, shopping malls, offices, and other indoor commercial environments.

MAIN FEATURES

- **Compact Full-Range Design:** Adopts a 6" full-range speaker unit for clear and natural sound reproduction in a compact form factor.
- **Minimalist Appearance:** Features a clean and stylish design with high-strength ABS housing, suitable for modern indoor spaces.
- **Easy Ceiling Installation:** Designed for convenient ceiling mounting in airport halls, shopping malls, offices, and other indoor commercial environments.

PARAMETERS:

Frequency Response	70 Hz~20 kHz
Sensitivity	90 dB ± 3 dB (1 m / 1 W)
Max. SPL	98 dB (1 m / 6 W)
Rated Power	6 W
Power Taps (100 V)	6 W / 3 W
Rated Impedance	3.3 kΩ (3 W) / 1.7 kΩ (6 W)
Input Voltage	100 V
Speaker Design	Full-range speaker
Speaker Component	6" full-range speaker unit
Housing Material	ABS
Grille Material	Powder-coated iron mesh
Color	White
Mounting	Ceiling-mounted
Application Environment	Indoor
Operating Temperature	-25°C to +55°C
Operating Humidity	≤95% RH, non-condensing
Cutout Dimension	Φ170 mm
Dimensions	Φ186 × 74 mm
Package Dimensions	190 × 78 × 195 mm
Weight	0.76 kg
Warranty	2 years

DIMENSION

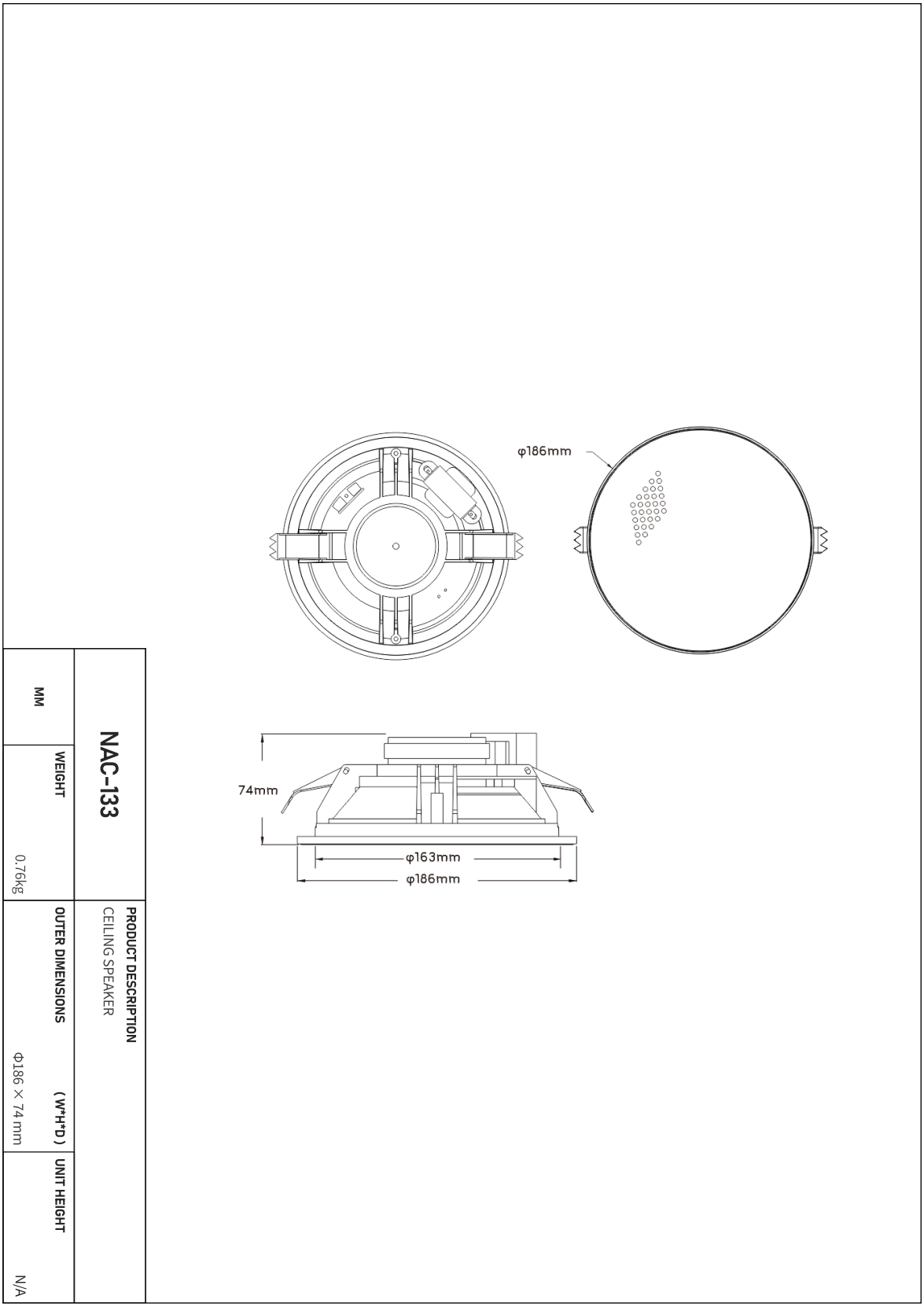
φ186mm
74mm
φ163mm
φ186mm
NAC-133
PRODUCT DESCRIPTION
CEILING SPEAKER
OUTER DIMENSIONS (W*H*D)
Φ186 × 74 mm
WEIGHT
0.76kg
UNIT HEIGHT
N/A
MM