NAC-730W
Wall Speaker



INTRODUCTION

SPON Wall Speaker NAC-730W is an indoor wall-mounted speaker with clear sound performance, easy installation, and suitability for public areas, meeting rooms, and other indoor applications.

MAIN FEATURES

- **Two-Way Speaker Design:** Adopts a two-way speaker design with a 6.5" woofer and 1" silk tweeter for clear and balanced sound reproduction.
- **Flexible Input Options:** Supports 70 V / 100 V line input and 8 Ω low-impedance input for flexible system integration.
- **Powerful Indoor Sound Reinforcement:** Delivers up to 40 W rated power, making it suitable for indoor paging and background music applications.

2-Way Speaker | Wall-Mount Installation | 8Ω Low-Impedance Input | 70V/100V

PARAMETERS:

Frequency Response	80 Hz to 20 kHz
Sensitivity	88 dB ± 3 dB (1 m / 1 W)
Max. SPL	104 dB (1 m / 40 W)
Rated Power	40 W
Power Taps (100 V)	40 W / 20 W / 10 W / 5 W
Power Taps (70 V)	40 W / 20 W / 10 W / 5 W / 2.5 W
Low-Impedance Input	8 Ω
Input Voltage	70 V / 100 V
Speaker Design	Two-way speaker
Speaker Component	6.5" woofer + 1" silk tweeter
Coverage Angle	115°
Housing Material	HIPS
Grille Material	Powder-coated iron mesh
Color	Black
Mounting	Wall-mounted
Application Environment	Indoor
Operating Temperature	-25°C to +55°C
Operating Humidity	⩽95% RH, non-condensing
Product Dimensions	216 × 299 × 196 mm
Package Dimensions	275 × 260 × 335 mm
Product Weight	3.34 kg
Warranty	2 years

DIMENSION

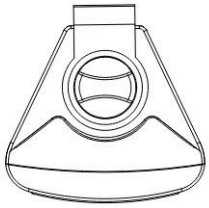

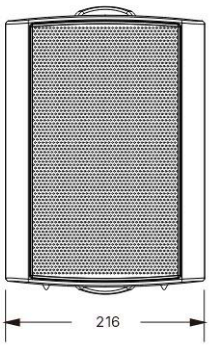

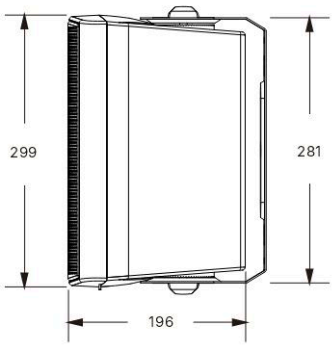

NAC-730W			
PRODUCT DESCRIPTION	OUTER DIMENSIONS (W*H*D)	WEIGHT	MM
WALL SPEAKER	216 × 299 × 196 mm	3.34 kg	
	UNIT HEIGHT		
	N/A		