GEN-5101P50 Digital Mixer Amplifier





DSP | Digital Amplifier | EQ Adjustment

INTRODUCTION

SPON Digital Mixer Amplifier GEN-5101P50 is a digital mixer amplifier designed for small- and medium-sized mosque sound reinforcement applications. It integrates a 2-channel Class-D digital amplifier, digital signal processor, mixer, and sound effect processing in one unit. With EQ adjustment and enhanced speech intelligibility, it delivers optimized voice reinforcement performance. An optional remote controller is available for convenient switching of amplifier output and different preset effects.

MAIN FEATURES

- **All-in-One Digital Mixer Amplifier:** Integrates a 2-channel Class-D digital amplifier, mixer, DSP, and sound effect processing in one unit for high system integration.
- **EQ Adjustment and Sound Optimization:** Supports EQ adjustment for optimizing audio performance according to the site environment and improving speech clarity.
- **High Speech Intelligibility:** Optimized for voice reinforcement applications where speech intelligibility is critical.
- **Flexible Audio Input and Output:** Supports microphone input, auxiliary input, and auxiliary output for flexible audio source connection and signal output.
- **Rack-Mount Design:** Designed in a rack-mount form factor for convenient installation and system integration in indoor sound reinforcement applications.

PARAMETERS:

Power Supply	AC100V–240V, 50/60Hz
Standby Power Consumption	<15W
Rated Output Power	2 × 240W
Speaker Output Type	100V Constant-Voltage Output
THD	≤1%
SNR	≥60dB
Frequency Response	130Hz–18kHz (±3dB)
Audio Input Port	MIC 1-6: -50dB (+48V Phantom Power), XLR Connector or Φ6.3mm TRS Jack; AUX 1: 500mV, 10kΩ, Unbalanced, RCA Jack; AUX 2: 1000mV, 10kΩ, Mixed Monaural, Unbalanced, Φ3.5mm TRS Jack
Audio Output Port	240W × 2 Channels, 100V, Screw Terminal; AUX Output: 500mV, 600Ω, Unbalanced, RCA Jack
Mounting	Rack-Mounted
Installation Environment	Dry Indoor Locations Only
Operating Temperature	-10°C to +50°C
Operating Humidity	≤90% RH, Non-Condensing
Housing Material	Metal Plate
Color	Black
Dimensions	483 × 435 × 100 mm
Package Dimensions	550 × 505 × 154 mm
Net Weight	8.1 kg
Warranty	2 years

ACCESSORIES:

ACCESSORIES	1 × Power Cord(Optional) 2 × L-Shaped Mounting Ears

CONNECTION DIAGRAM

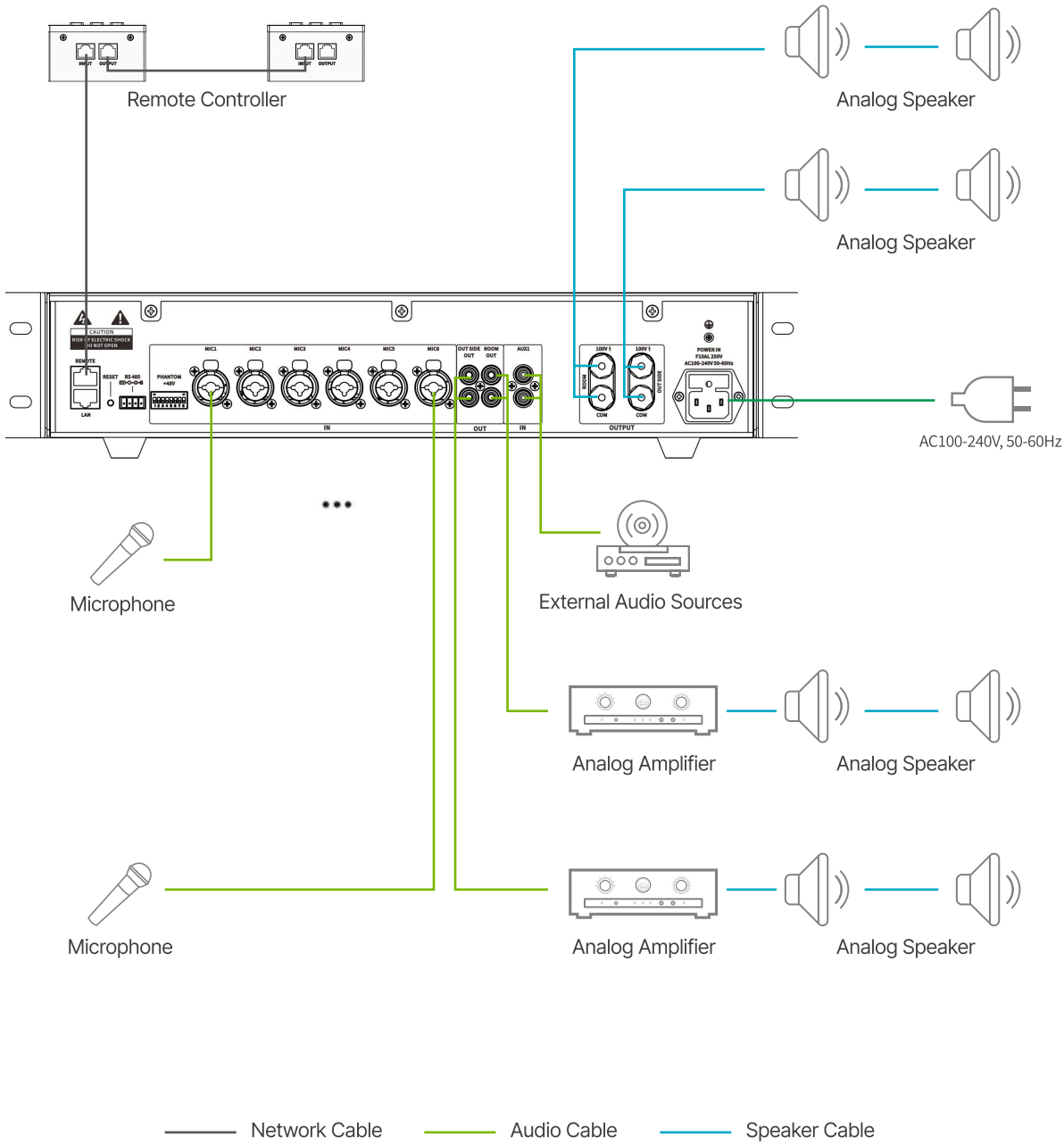

APPLICATION 1

The Digital Mixer Amplifier GEN-5101P50 features multiple audio input interfaces for local audio amplification. This all-in-one solution is simple, reliable, and easy to operate with minimal technical knowledge, while delivering clear and high-quality sound—ideal for mosque applications.

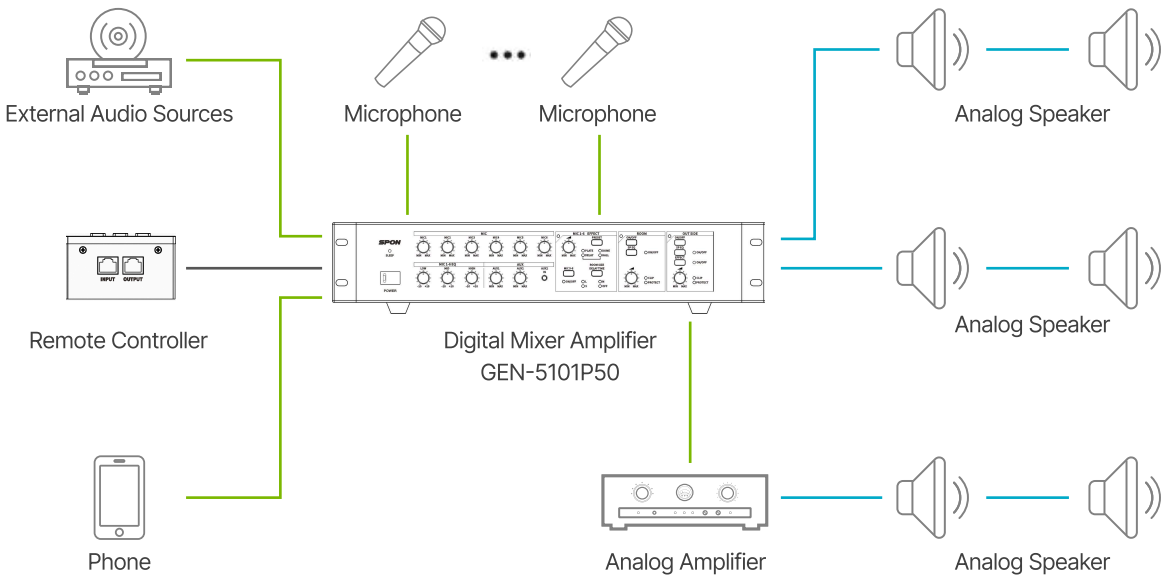

DIMENSION

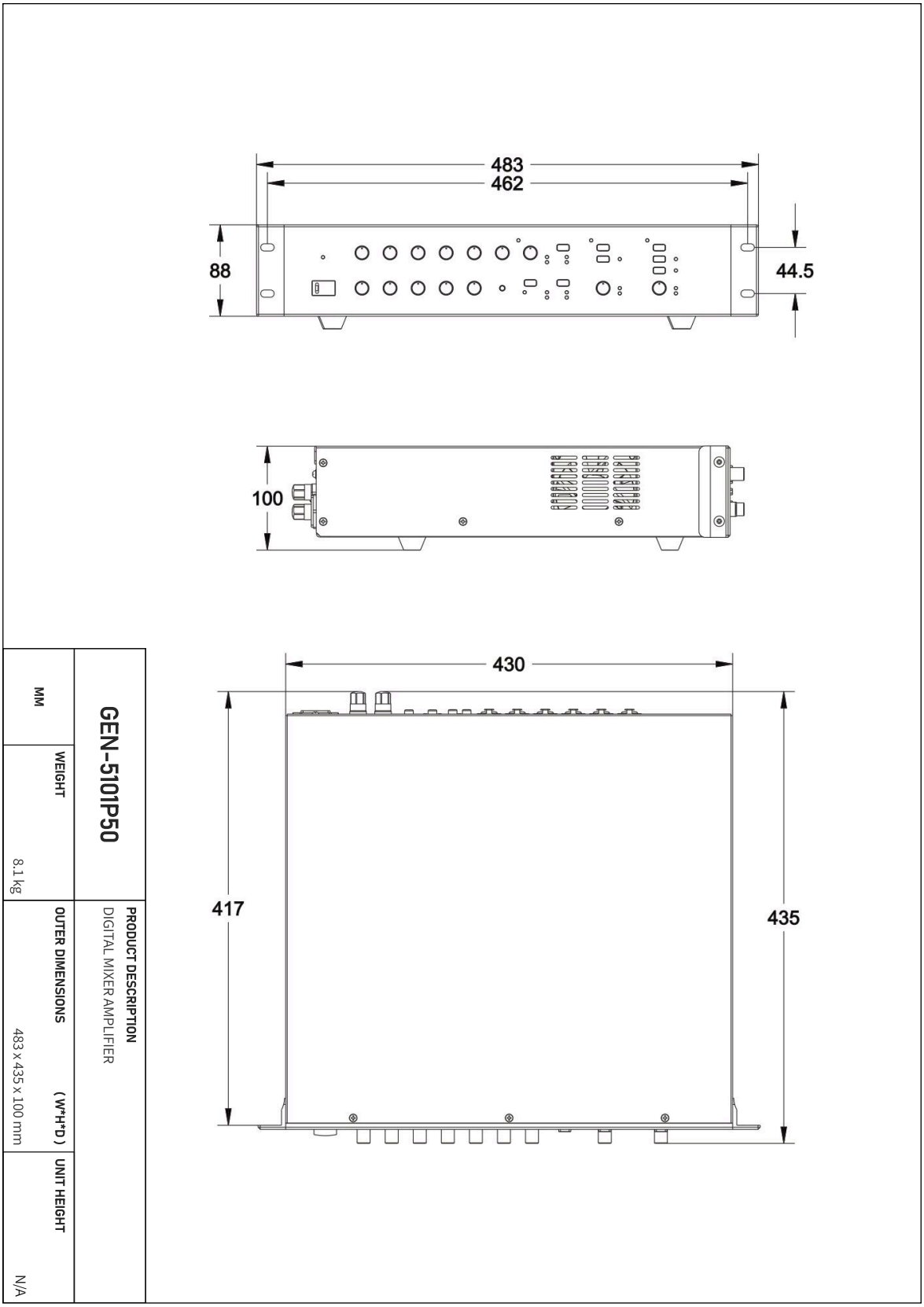

GEN-5101P50	WEIGHT	OUTER DIMENSIONS (W*H*D)	UNIT HEIGHT
PRODUCT DESCRIPTION	8.1 kg	483 x 435 x 100 mm	N/A
DIGITAL MIXER AMPLIFIER			

MM