NAC-5003
IP Network Interface Unit







INTRODUCTION

NAC-5003 is an IP network interface unit in a 1U rack-mount design, developed for linkage between fire alarm systems and IP public address systems. Built on a high-speed industrial dual-core architecture, it achieves startup in less than 3 seconds and provides 32 alarm input channels and 8 alarm output channels. It supports automatic alarm reporting, linkage task execution, and cross-zone broadcast control, making it suitable for fire alarm and emergency public address applications.

MAIN FEATURES

- **High-Speed ARM + DSP Architecture:** Built with an industrial dual-core architecture for fast and stable response, with startup time under 3 seconds.
- **Rich Alarm Interface Expansion:** Provides 32 alarm input channels and 8 short-circuit output channels for integration with various fire alarm linkage applications.
- **Automatic Alarm Task Handling:** Alarm information can be automatically uploaded to the server for task execution, supporting upper-level linkage and all-zone alarm broadcasting.
- **Prestored Alarm Audio Files:** Alarm audio files can be stored in advance on the server for quick access and playback during emergency situations.
- **Flexible Network Connectivity:** Supports Ethernet access with cross-subnet and cross-router deployment capability for complex network environments.

PARAMETERS:

Power Supply	AC100V–240V, 50–60Hz
Power Consumption	⩽15W
Mounting	Rack Mount
Operating Temperature	-10°C to +70°C
Operating Humidity	⩽90% RH, Non-Condensing
Weight	2.7 kg
Dimensions	483 × 259 × 44 mm
Package Dimensions	563 × 333 × 123 mm
Warranty	2 Years

ACCESSORIES:

ACCESSORIES	4 × 4-pin terminal (3.81 mm) 8 × 5-pin terminal (3.81 mm) 1 × Power Cord (3 × 1.0mm^2 / 1.5m, Optional)

CONNECTION DIAGRAM

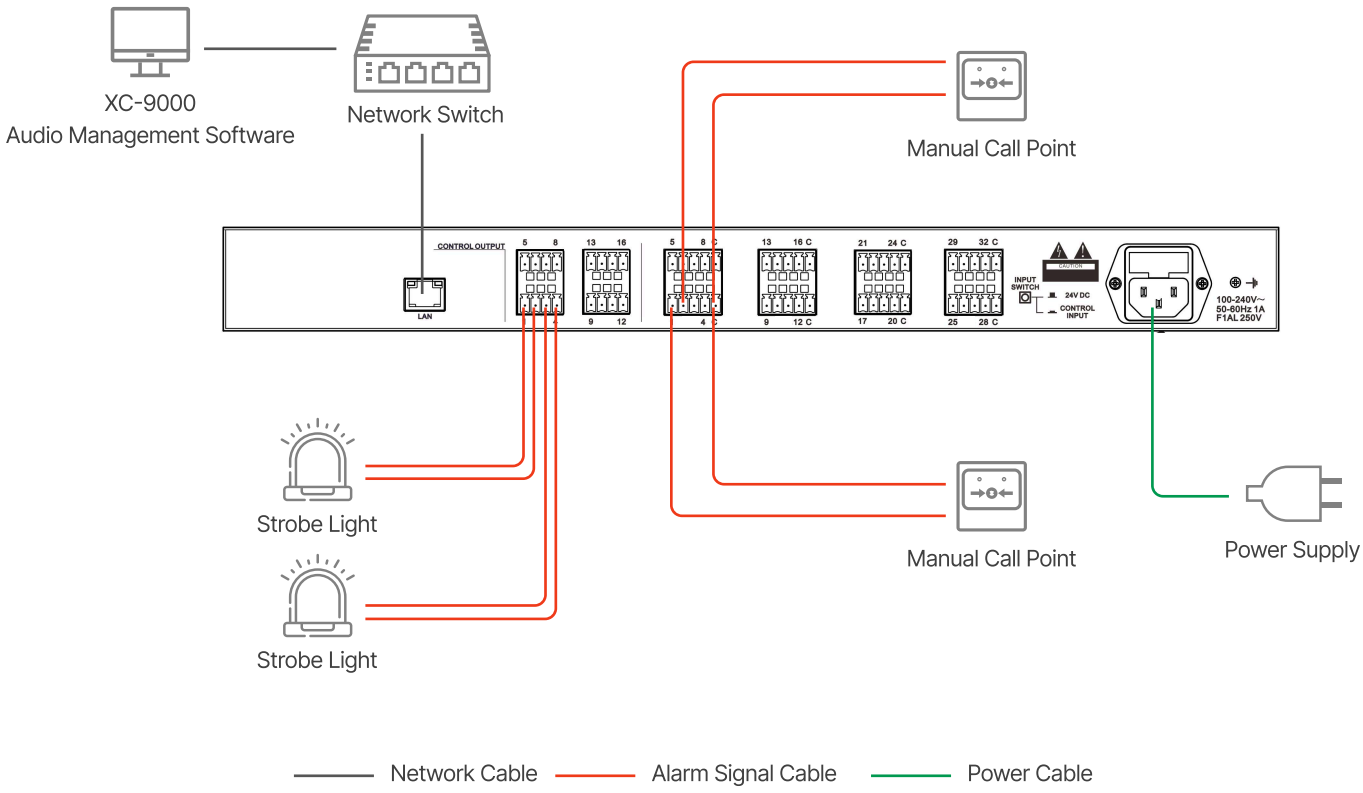

APPLICATION

The NAC-5003 IP Network Interface Unit can receive I/O signals from 3rd-party systems like fire alarm system, and trigger specific tasks in XC-9000 automatically, such as playing fire alarm announcements to all IP speakers or IP amplifiers.

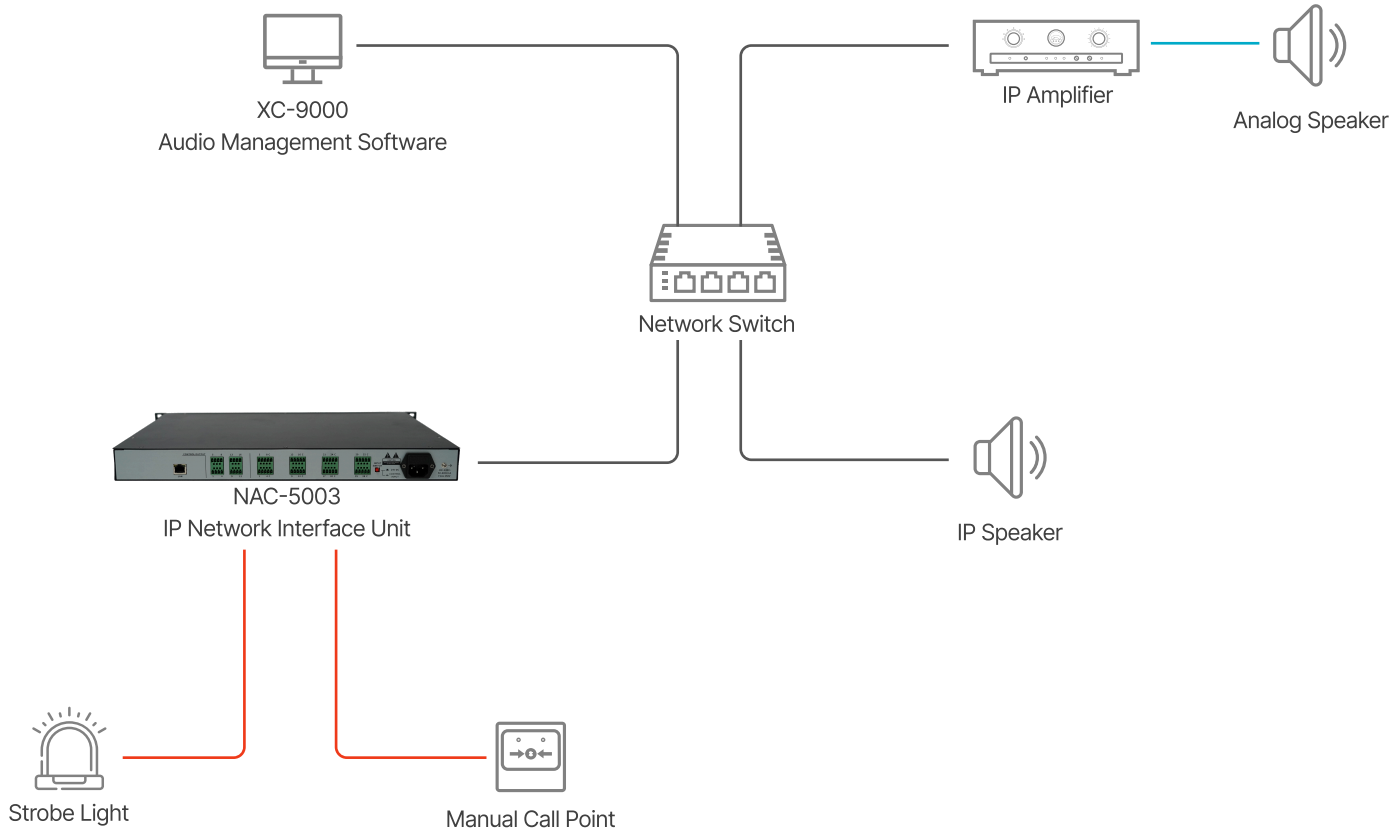

DIMENSION

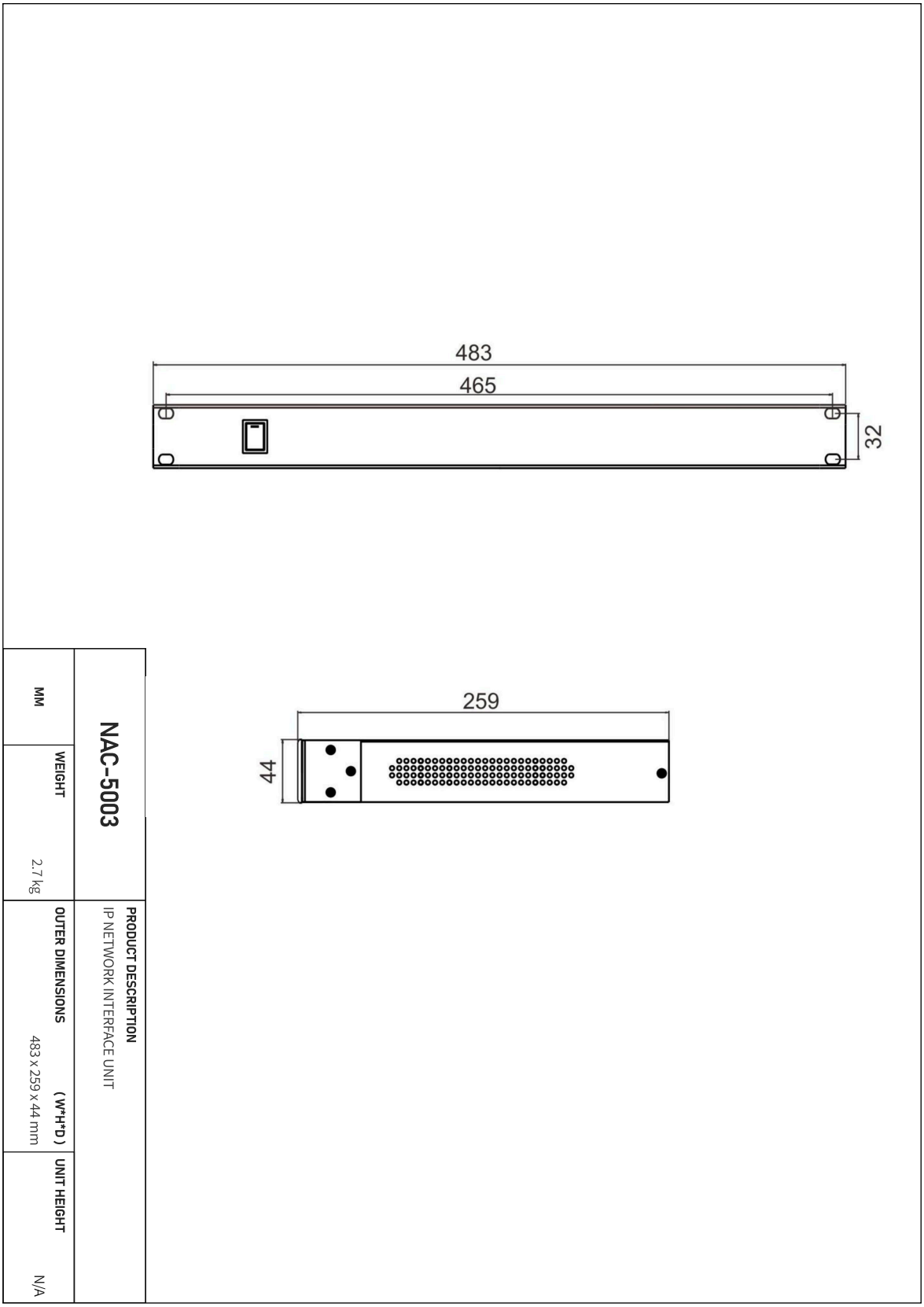
483
465
32
259
44
NAC-5003
PRODUCT DESCRIPTION
IP NETWORK INTERFACE UNIT
OUTER DIMENSIONS (W*H*D)
483 x 259 x 44 mm
WEIGHT
2.7 kg
UNIT HEIGHT
N/A
MM