NAC-22
Volume Controller





INTRODUCTION

SPON Volume Controller NAC-22 is a 100V line volume controller designed for stepped volume adjustment and off control in speaker circuits. Featuring a standard wall-mount panel design, it supports both flush-mount and surface-mount installation, making it suitable for hotels, schools, office buildings, shopping malls, and other public address applications.

MAIN FEATURES

- **Stepped Volume Control:** Supports 4-step volume adjustment with off position for convenient local audio control.
- **100V Line Compatible:** Designed for 100V line speaker systems and easy integration into PA applications.
- **Flexible Mounting Options:** Supports both flush-mount and surface-mount installation for different site conditions.
- **Standard Wall Panel Design:** Features a clean and compact wall-panel appearance suitable for indoor environments.

30W
Volume Control

4-Step
Volume Adjustment

100V Constant
Voltage System

PARAMETERS:

Rated Power	30W
Input Voltage	100V
Step Attenuation	6dB
Total Attenuation	18dB
Switch Positions	4 Steps + Off
Material	ABS
Color	White
Mounting	Flush-Mount / Surface-Mount
Product Dimensions (W × H × D)	87 × 87 × 60 mm
Package Dimensions	92 × 92 × 86 mm

CONNECTION DIAGRAM

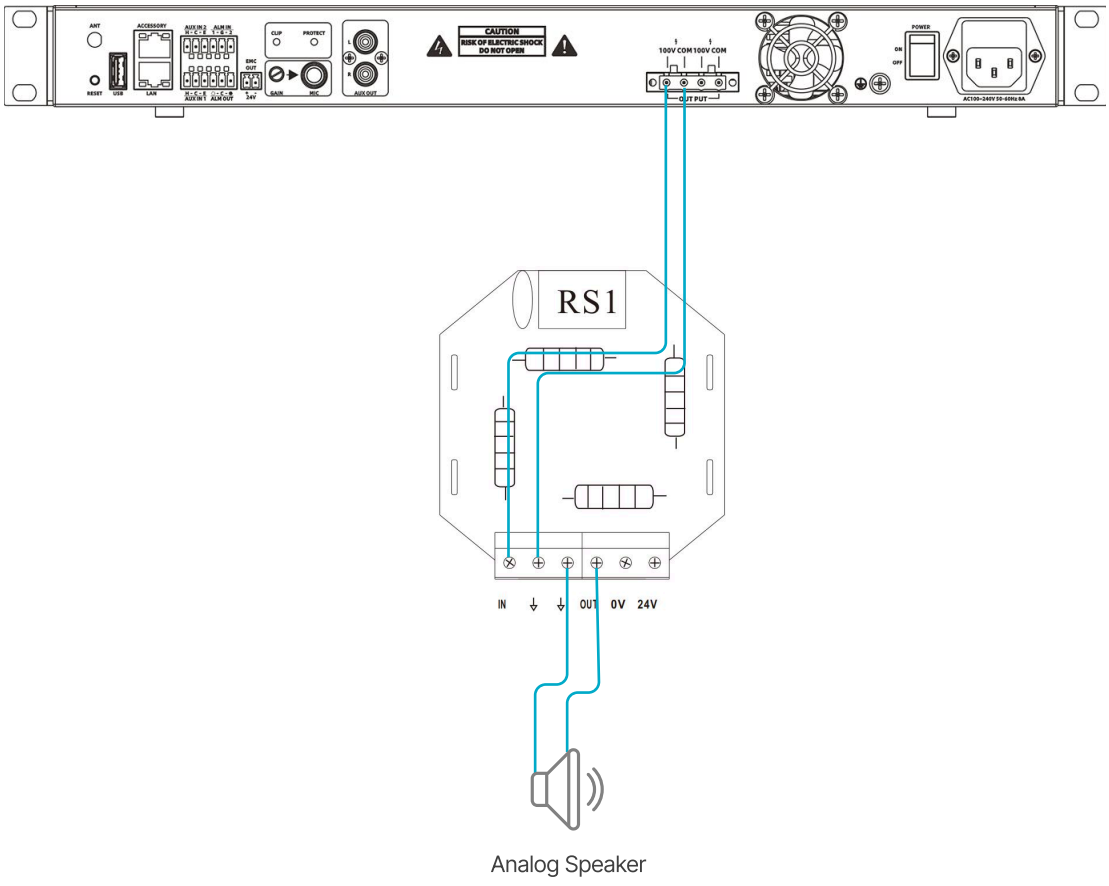

Speaker Cable

APPLICATION

SPON Volume Controller NAC-22 is a 100V line volume controller designed for stepped volume adjustment.

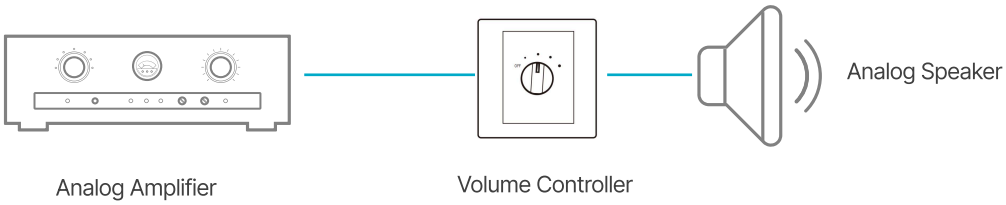

DIMENSION

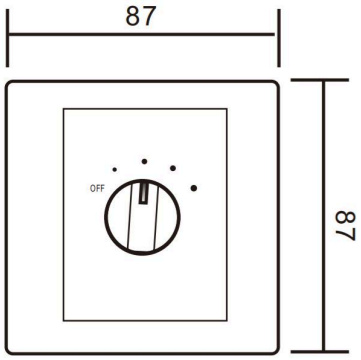

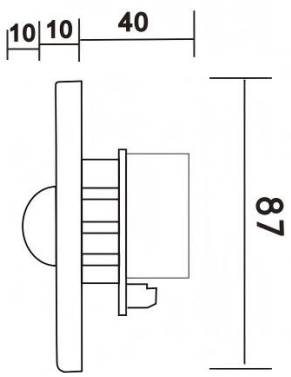

NAC-22	MM
PRODUCT DESCRIPTION: VOLUME CONTROLLER	WEIGHT: 0.16 kg
OUTER DIMENSIONS (W*H*D): 87 × 87 × 60 mm	UNIT HEIGHT: N/A