XC-9520A
IP Remote Control Panel





Remote Broadcasting | Volume Control | Standard 86 Back Box

INTRODUCTION

SPON's IP Remote Control Panel XC-9520A is a network wall-mounted audio touch panel designed with a standard 86-type wall box structure and a 4-inch capacitive color touchscreen. It is suitable for audio control and task broadcasting management in hotels, meeting rooms, classrooms, lecture halls, and other indoor public areas.
The device supports broadcast task triggering, zone-based audio on demand, volume adjustment, and online terminal status monitoring. With a standard RJ45 interface, it can be easily integrated into Ethernet systems for indoor public address and background music control applications

MAIN FEATURES

- **86-Type Wall Box Design:** Designed for standard 86-type wall box installation, allowing convenient deployment in common wall-mounted control applications.
- **Capacitive Touch Display:** Equipped with a 4-inch capacitive color touchscreen with 480 × 480 resolution for intuitive and easy operation.
- **Broadcast Task Control:** Supports task broadcasting, zone-based audio on demand, and volume adjustment for quick control of the audio system.
- **Terminal Status Monitoring:** Allows users to check online terminal information and operating status for easier daily management.
- **Flexible Network Access:** Features a standard RJ45 network interface for Ethernet-based deployment in indoor network audio control applications.

PARAMETERS:

Power Input	AC100 to 240 V, 50/60 Hz
Display Screen	4-inch Capacitive Color Touchscreen
Resolution	480 × 480
Network Interface	10BASE-T / 100BASE-TX, RJ45
Network Protocols	TCP/IP, UDP, ARP, ICMP, IGMP
Configuration	Web Interface or On-Device Configuration
Mounting Method	86-Type Wall Box Installation
Installation Environment	Indoor Dry Locations Only
Operating Temperature	0°C to 40°C
Operating Humidity	5% to 90% RH, Non-Condensing
Housing Material	Plastic
Color	Black
Product Dimensions	86 × 86 × 37.5 mm
Package Dimensions	110 × 110 × 77 mm
Weight	0.21 kg
Warranty	2 Years

ACCESSORIES:

ACCESSORIES	2 × 86 Box Mounting Screws

CONNECTION DIAGRAM

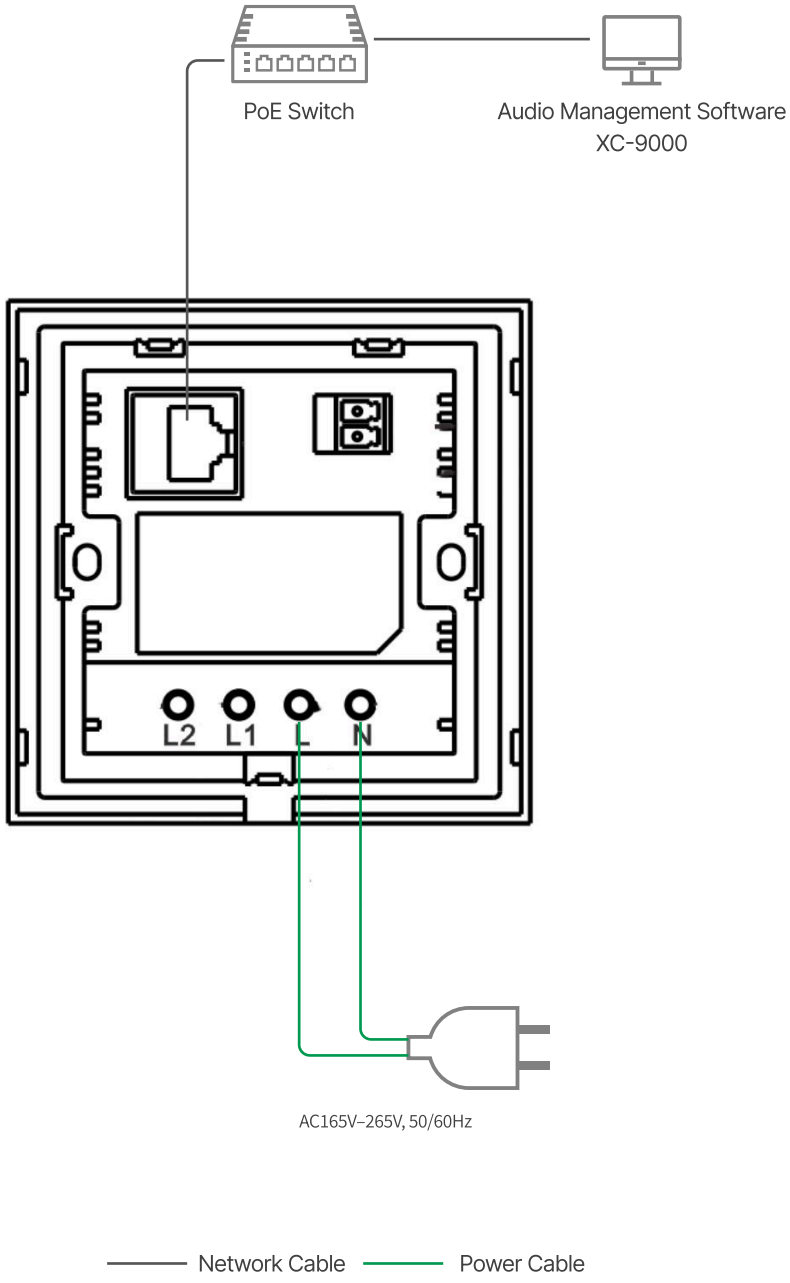

APPLICATION

IP Remote Control Panel XC-9520A supports retrieving tasks configured in the XC-9000 software and allows users to manually play them back on the XC-9520A. During playback, users can adjust the volume in real time. It also supports remote on-demand (AOD) playback of MP3 files stored in the media center of the XC-9000 system, making it suitable for flexible and efficient audio control applications.

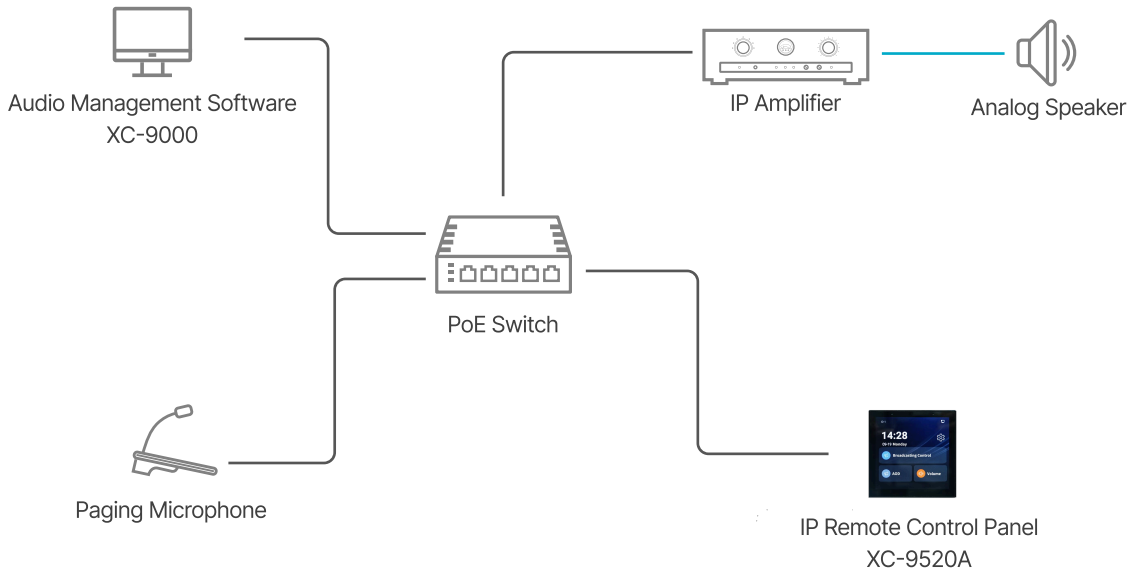

DIMENSION

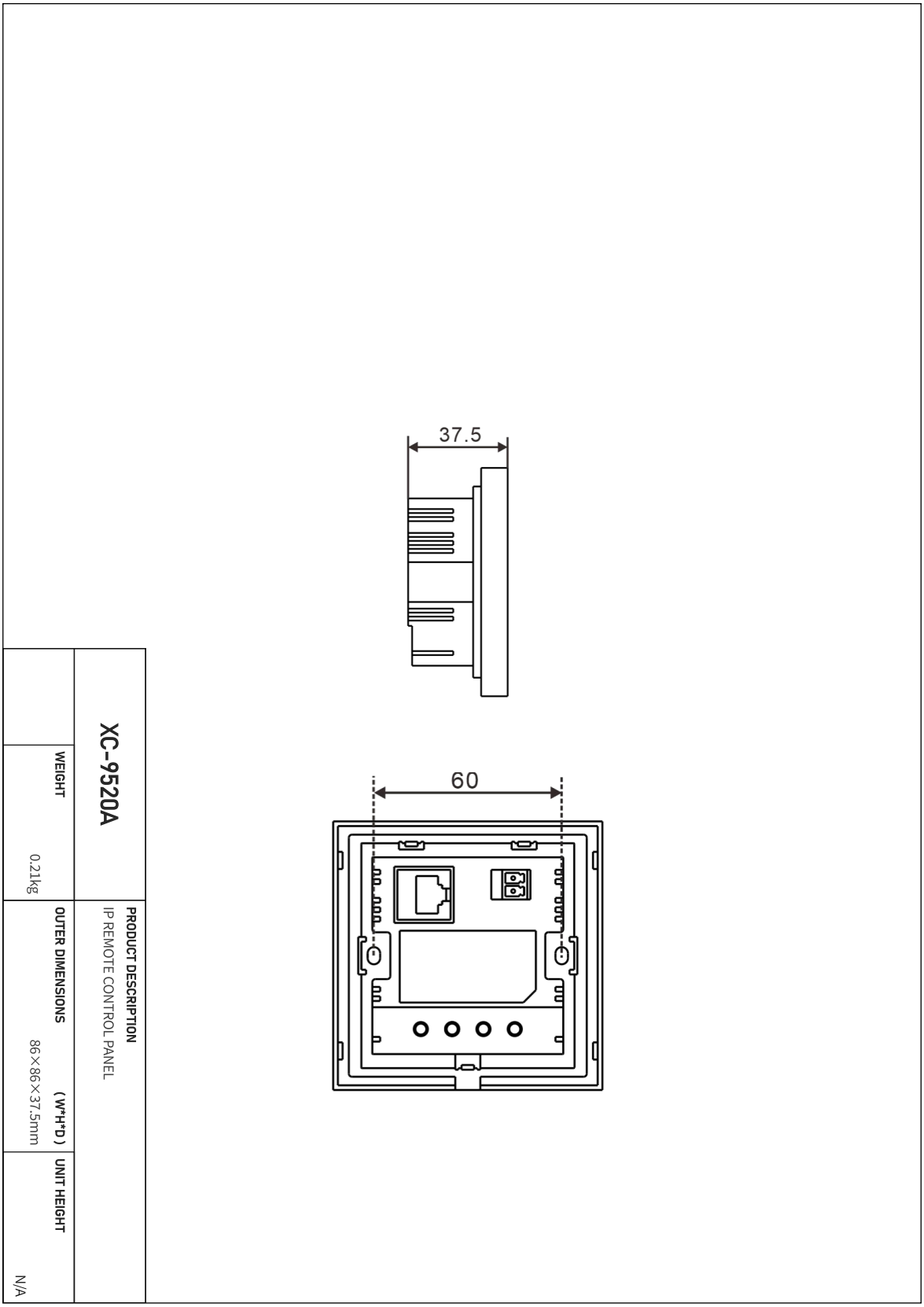
37.5
60
XC-9520A
PRODUCT DESCRIPTION
IP REMOTE CONTROL PANEL
OUTER DIMENSIONS (W*H*D)
86×86×37.5mm
WEIGHT
0.21kg
UNIT HEIGHT
N/A