NAC-3240
Digital Integrated Power Amplifier

INTRODUCTION

SPON Digital Integrated Power Amplifier NAC-3240 is a digital integrated amplifier featuring a high-performance digital power amplifier with high efficiency, strong performance, and low distortion. It supports 100V constant-voltage output and is equipped with microphone input as well as line input/output interfaces. With a 1U rack-mount design, it is suitable for schools, shopping malls, office buildings, and various indoor public address applications.





1U Rack | MIC Input | 100V Fixed Voltage

MAIN FEATURES

- **High-Performance Digital Amplifier:** Adopts a high-performance digital amplifier design with high efficiency, low distortion, and stable output performance.
- **100V Constant-Voltage Output:** Supports 100V constant-voltage output for connection to constant-voltage public address speaker systems.
- **Multiple Audio Interfaces:** Equipped with microphone input and line input/output interfaces to meet basic sound reinforcement requirements.
- **1U Rack-Mount Design:** Compact 1U rack-mount design for convenient installation and system integration.

PARAMETERS:

Power Supply	AC220V, 50/60Hz
Power Consumption	⩽300W
Rated Output Power	240W
THD	⩽0.3% at 1kHz, 1/2 output power
SNR	⩾84dB
Frequency Response	130Hz–18kHz
Mounting	Rack-Mounted
Installation Environment	Dry Indoor Locations Only
Operating Temperature	0°C to +45°C
Operating Humidity	⩽90% RH, Non-Condensing
Housing Material	Surface-Treated Steel Plate
Color	Black
Dimensions	440 × 300 × 44 mm
Package Dimensions	573 × 368 × 123 mm
Net Weight	3.45 kg
Warranty	2 years

ACCESSORIES:

ACCESSORIES	2 × Connection Terminals (3.81-5P) 1 × Connection Terminal (7.62-4P) 8 × Countersunk Cross Screws (M3×6) 2 × Mounting Ears 4 × Foot Pads (Φ12×3) 1 × Power Cord(Optional)

CONNECTION DIAGRAM

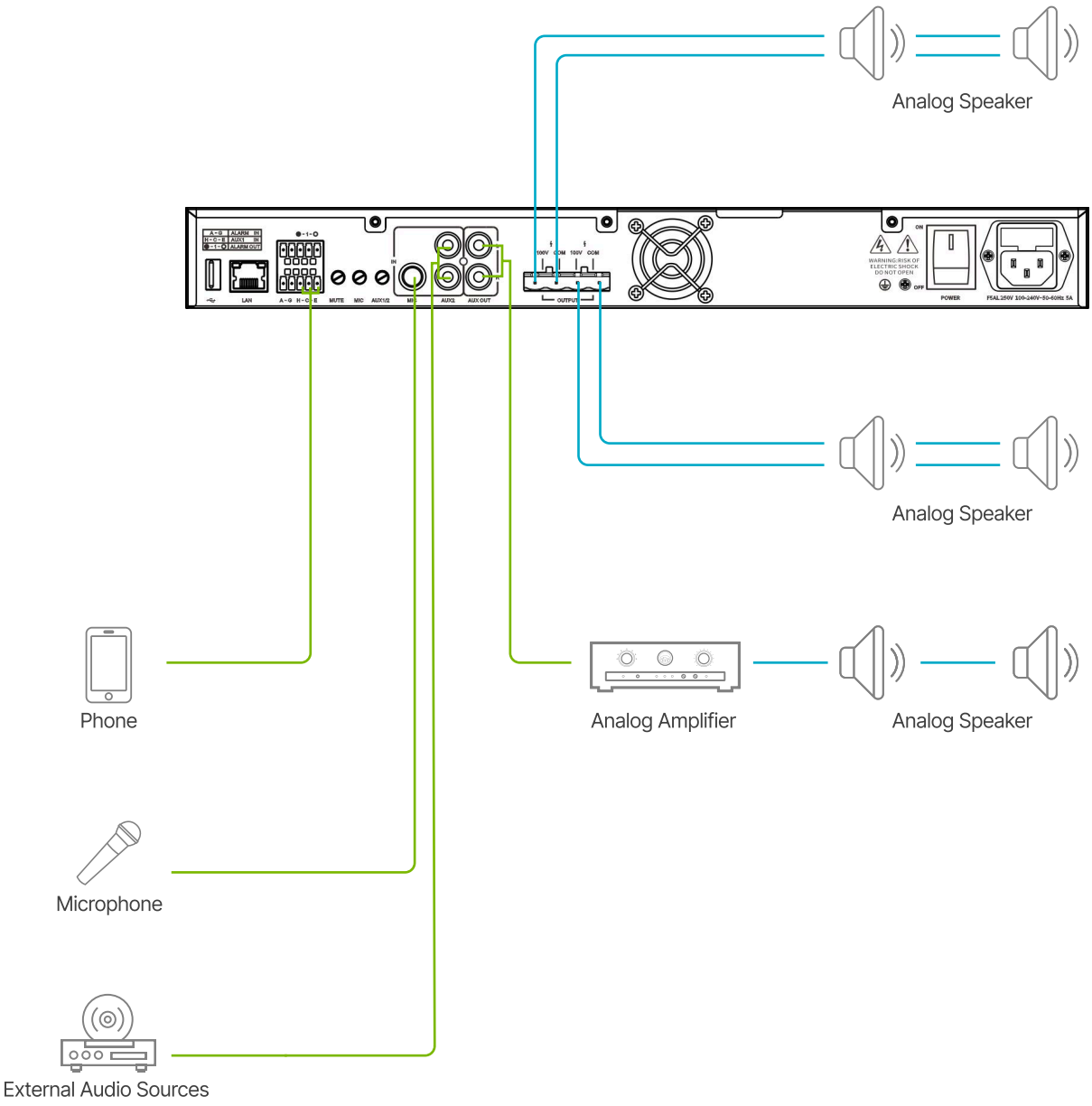

APPLICATION 1

The NAC-3240 Digital Integrated Power Amplifier is equipped with a line input interface that can be connected to the GEN-3001A03 network audio interface for audio amplification for live broadcasting or background music playback.

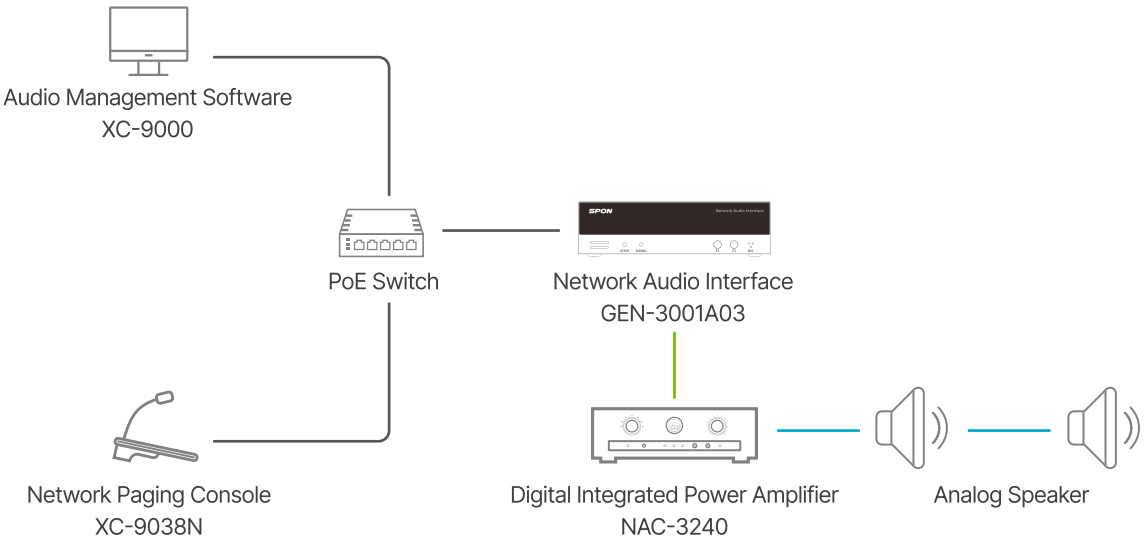

APPLICATION 2

The NAC-3240 Digital Integrated Power Amplifier is equipped with a line input interface, which can be connected to a preamplifier to achieve local sound reinforcement from multiple audio sources.

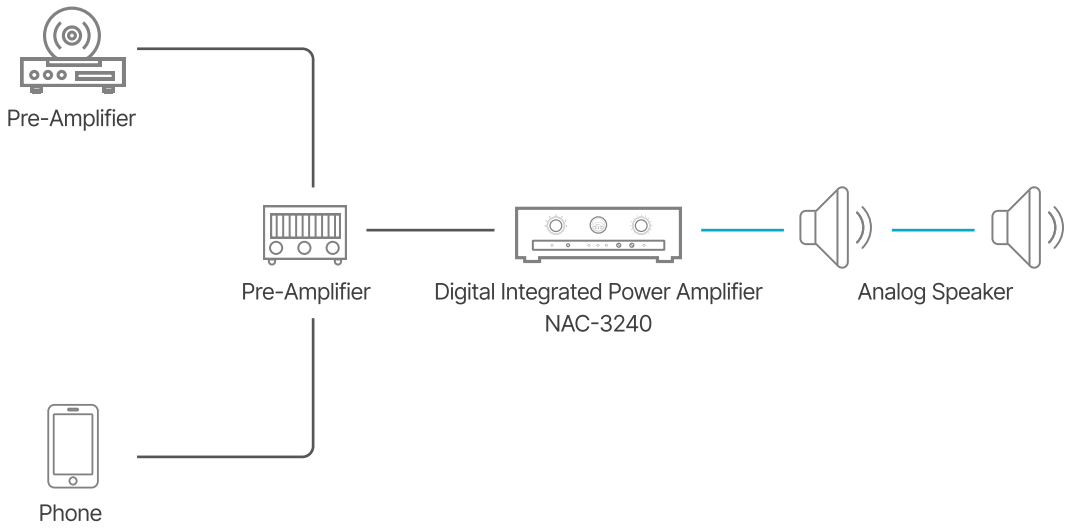

DIMENSION

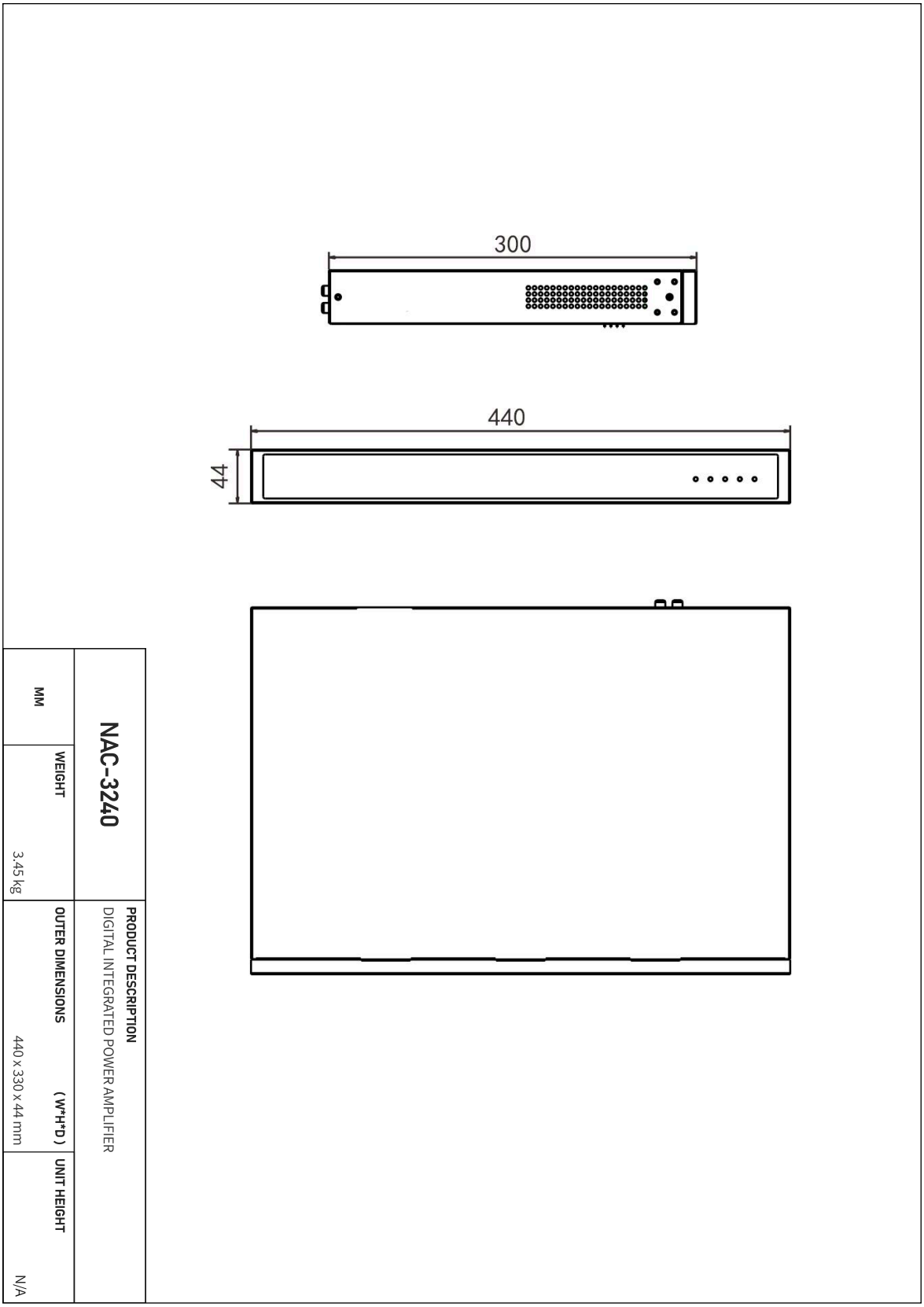
300
440
44
NAC-3240
PRODUCT DESCRIPTION
DIGITAL INTEGRATED POWER AMPLIFIER
OUTER DIMENSIONS (W*H*D)
440 x 330 x 44 mm
UNIT HEIGHT
N/A
WEIGHT
3.45 kg
MM