GEN-5302P24 Network Digital Amplifier





SIP Onvif Multicast

INTRODUCTION

GEN-5302P24 is a network digital amplifier designed for IP public address and network audio reinforcement systems. It integrates network audio transmission, SIP intercom, Bluetooth input, local audio storage, and power amplification in one unit. Supporting standard network protocols and up to 20 multicast streams, the amplifier features a built-in Class-D amplifier with 100V / 240W constant-voltage output for flexible connection to distributed loudspeaker systems. It supports multiple audio input sources including AUX, MIC, Bluetooth, and network audio, and can be configured and managed remotely via web interface or DevConfig Tool. It is suitable for indoor public address applications such as schools, shopping malls, office buildings, campuses, and transportation hubs.

MAIN FEATURES

- **Network Audio Transmission:** Supports standard network protocols, SIP intercom, and up to 20 multicast streams for flexible system integration.
- **100V Constant-Voltage Output:** Built-in Class-D digital amplifier with 100V output, ideal for long-distance public address applications.
- **Multiple Audio Inputs:** Supports line input, microphone input, Bluetooth input, and network audio input for versatile source connectivity.
- **Local Audio Storage:** Built-in 80 MB storage supports up to 20 audio files for local playback applications.
- **Flexible Installation:** Supports desktop, wall-mount, and rack-mount installation for different project requirements.

PARAMETERS:

Network Interface	100BASE-TX, RJ45 Connector
Network Protocols	TCP/IP, UDP, HTTP, RTP, RTSP, ARP, ICMP, NTP, SIP, ONVIF, DHCP
Configuration	Web Interface or DevConfig Tool
Audio Transmission	Multicast, up to 20 streams (editable)
Audio Codec	Opus, PCMU (G.711u), PCMA (G.711a), G.722
Audio File Format	WAV, MP3
Audio Storage	Max 20 audio files, 80 MB
Audio Stream	WAV: 8/16/22/44.1/48 kHz sampling rate, 8/16-bit, mono/stereo; MP3: 32/44.1/48 kHz sampling rate, 64–320 kbps, CBR/VBR, mono/stereo
SNR	⩾90 dB
Frequency Response	20 Hz to 20 kHz (±3 dB)
THD+N	<0.1%@1 kHz
Amplifier Type	Class-D
Audio Input Connectors	1 × 3-pin Phoenix connector (AUX input, balanced, 500 mV); 1 × 6.5 mm TRS jack (MIC input, balanced, 20 mV); 1 × IPX1 external 2.4G antenna (Bluetooth); 1 × RJ45 (network)
Audio Output Connectors	1 × 2-pin Phoenix connector (power output); 1 × 3-pin Phoenix connector (AUX output)
Audio Output Power	100V, 1 × 240W
Input Voltage	100V–240VAC, 50/60Hz
Standby Power Consumption	<10 W
Maximum Power Consumption	<280 W
Control Input	2, 1 × 3-Pin Phoenix Connector
Control Output	1, 1 × 3-Pin Phoenix Connector
Enclosure Material	Sheet Metal
Color	Dark Gray
Installation	Desktop / Wall Mount / Rack Mount
Application Environment	Indoor
Operating Temperature	0°C to +50°C
Operating Humidity	⩽90% RH, non-condensing
Product Dimensions	210 × 317 × 44 mm
Packing Dimensions	478 × 290 × 125 mm
Weight	2.3 kg
Warranty	2 years

ACCESSORIES:

ACCESSORIES	1 × Power Cord(Optional) 1 × 2.4G Glue Stick Antenna 2 × 6Pin Terminal (3.81-6P) 1 × 2Pin Terminal (5.08-2P) 20× Countersunk Cross Screws (M3×6) 2 × Direct Hangers 1 × Small Hanger 1 × Large Hanger 4 × Foot Pads (FF-7)

CONNECTION DIAGRAM

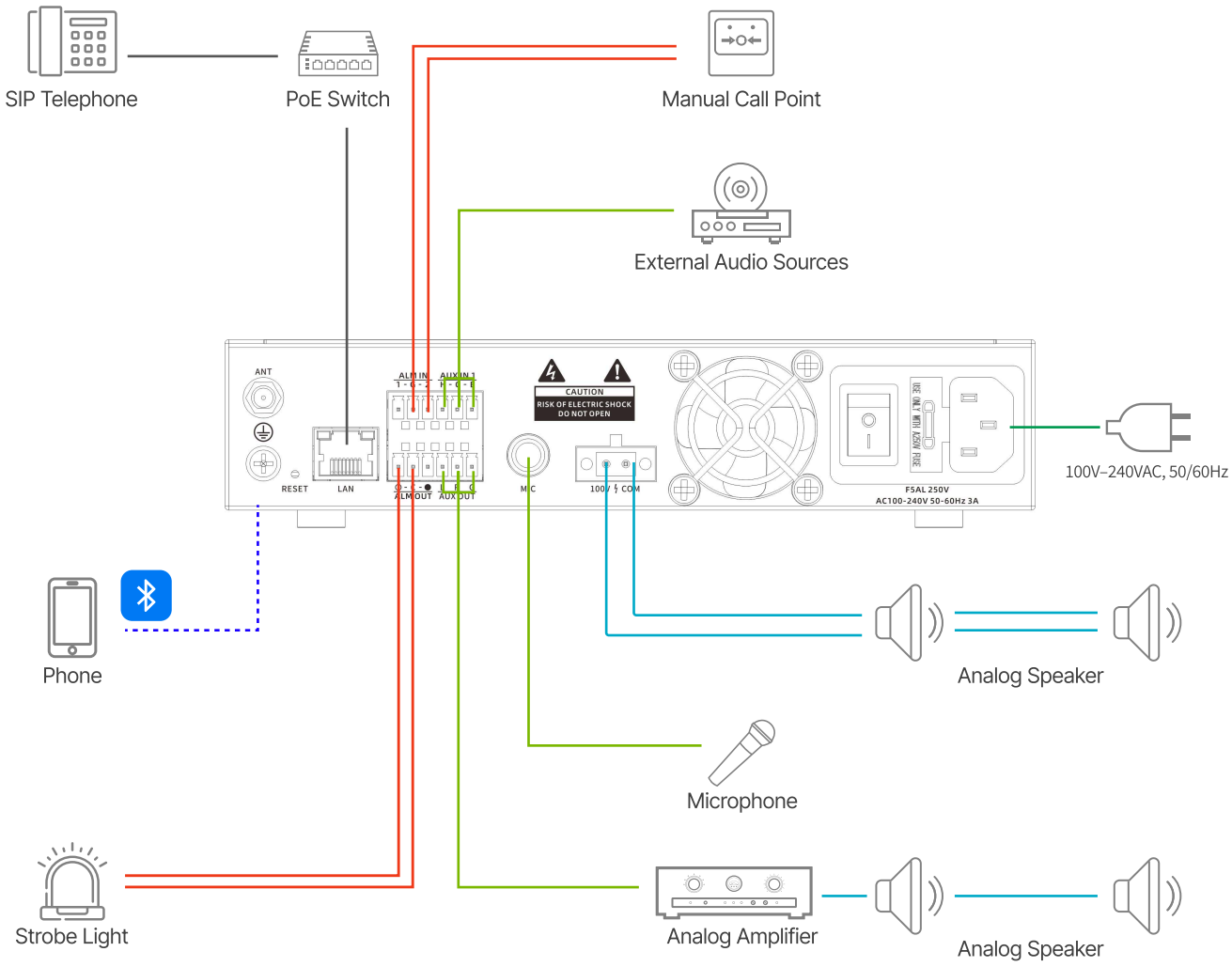

APPLICATION 1

The GEN-5302P24 Network Digital Amplifier receives audio streams through protocols such as SIP, ONVIF, and multicast, and outputs audio to analog amplifiers or constant-voltage speakers. It supports multiple local audio inputs (microphone, line input, Bluetooth for local broadcasting and background music. With a built-in Class-D digital amplifier that offers high efficiency and low heat generation, it is ideal for public address system setups.

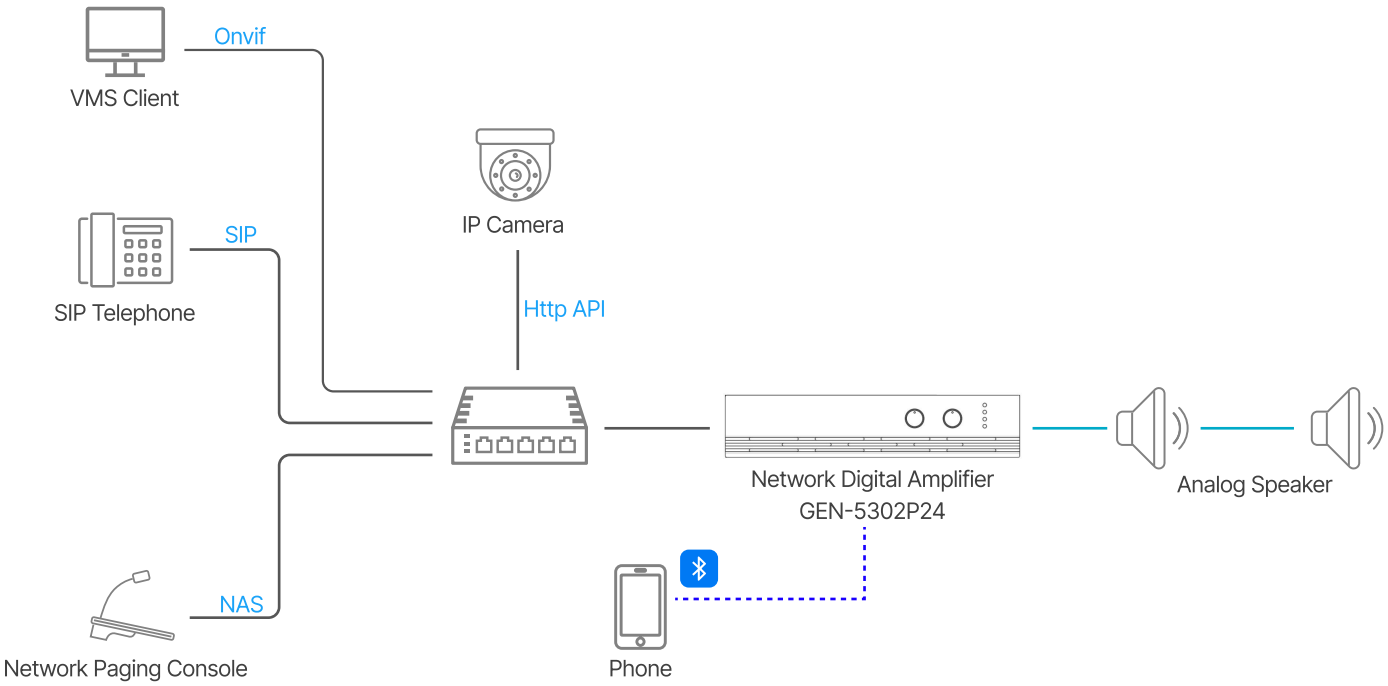

DIMENSION

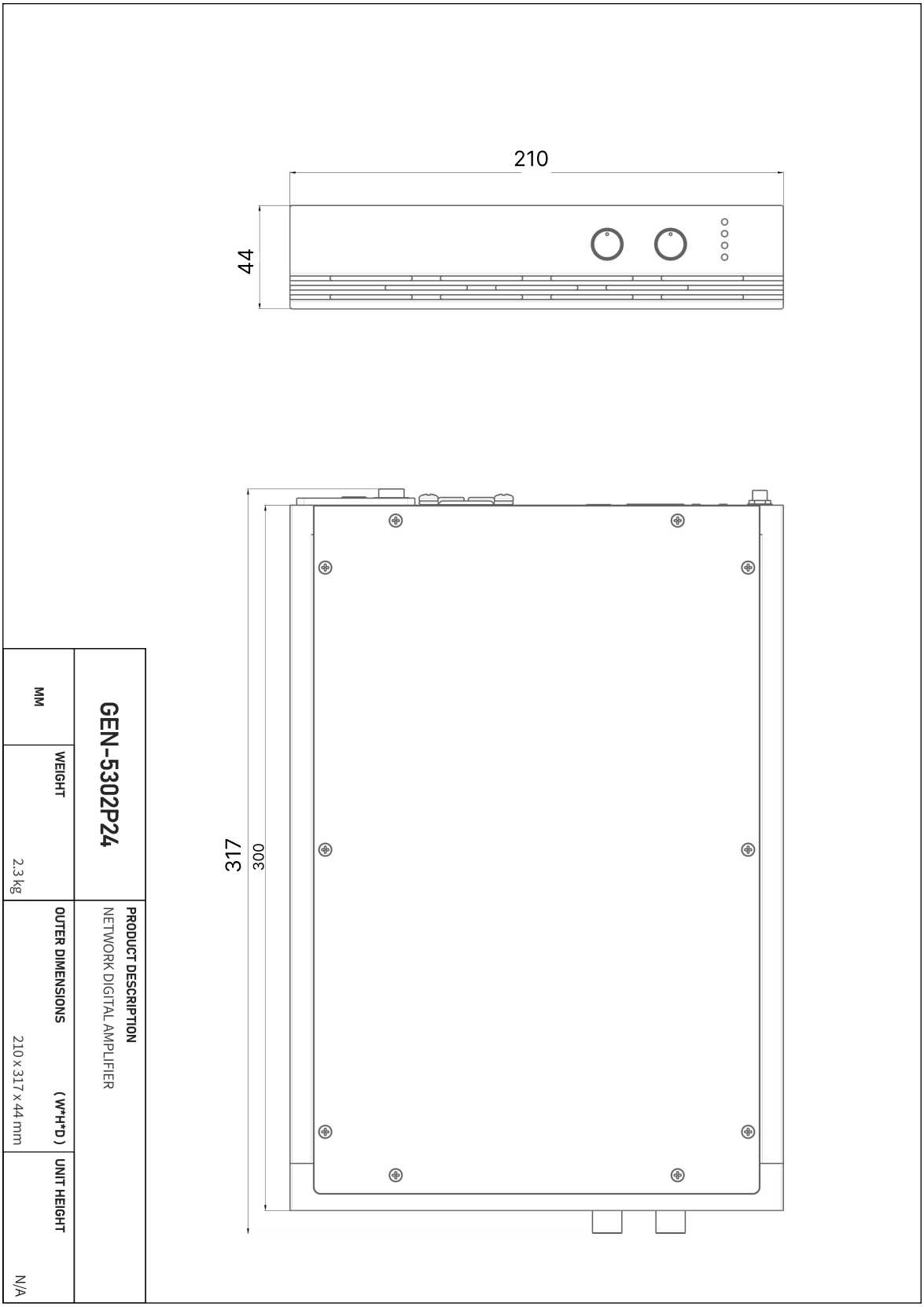

GEN-5302P24	WEIGHT	MM
PRODUCT DESCRIPTION	OUTER DIMENSIONS (W*H*D)	UNIT HEIGHT
NETWORK DIGITAL AMPLIFIER	210 x 317 x 44 mm	N/A