NAC-2605
Lawn Speaker





INTRODUCTION

The NAC-2605 is a lawn speaker with a waterproof fiberglass enclosure and an outdoor-friendly design. Equipped with a coaxial speaker unit, it delivers clear, full, and immersive sound, making it suitable for scenic areas, parks, gardens, and other outdoor leisure environments.

MAIN FEATURES

- **Outdoor-Friendly Design:** Designed for outdoor use with a weather-resistant enclosure and landscape-friendly appearance.
- **Coaxial Speaker Design:** Equipped with a 6.5" coaxial speaker unit for clear and full sound reproduction.
- **Suitable for Landscape Applications:** Ideal for scenic areas, parks, gardens, and other outdoor leisure environments.

Lawn Speaker | Coaxial Speaker | IPX5 | Landscape Sound | Outdoor Use

PARAMETERS:

Frequency Response	120 Hz to 15 kHz
Sensitivity	95 dB ± 3 dB (1 m / 1 W)
Max. SPL	109 dB (1 m / 25 W)
Rated Power	25 W
Power Taps (100 V)	25 W / 15 W
Rated Impedance	0.40 kΩ (25 W) / 0.67 kΩ (15 W)
Input Voltage	100 V
Speaker Design	Coaxial speaker
Speaker Component	6.5" coaxial speaker unit
Housing Material	Fiberglass
Color	Green
IP Rating	IPX5
Mounting	Ground placement
Application Environment	Outdoor
Operating Temperature	-25°C to +55°C
Operating Humidity	≤95% RH, non-condensing
Dimensions	Φ295 × 385 mm
Weight	7 kg
Warranty	2 Years

DIMENSION

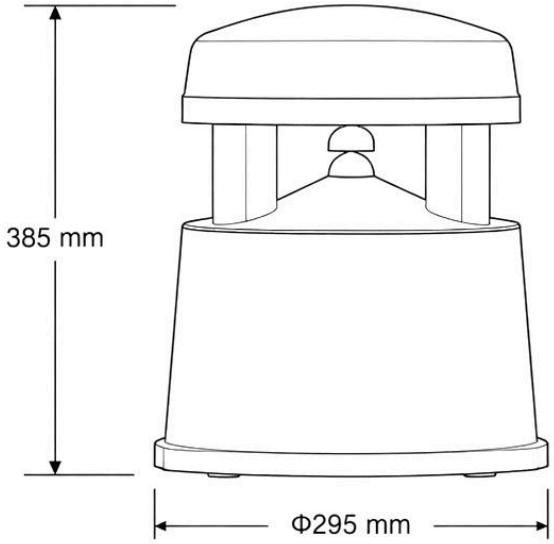

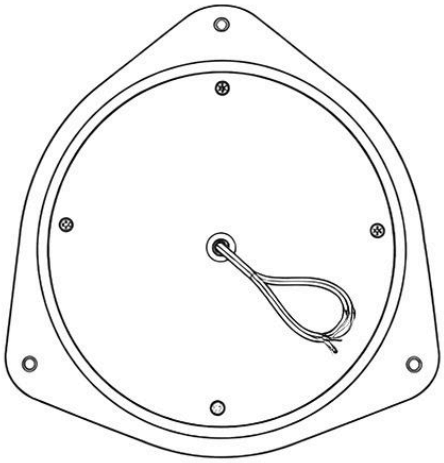

NAC-2605	PRODUCT DESCRIPTION: LAWN SPEAKER
WEIGHT: 7 kg	OUTER DIMENSIONS (W*H*D): Φ295 x 385 mm
MM	UNIT HEIGHT: N/A