NAC-134
Ceiling Speaker



INTRODUCTION

The NAC-134 is a stylish ceiling speaker with a minimalist design and high-strength ABS housing. It delivers clear sound reproduction and is suitable for airport halls, shopping malls, offices, and other indoor commercial environments.

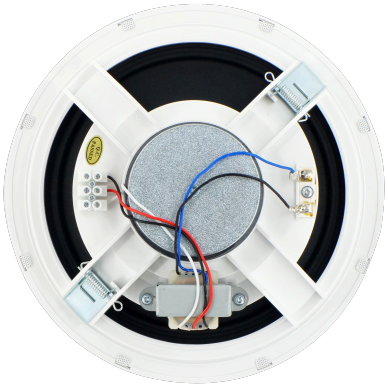

MAIN FEATURES

- **Compact Full-Range Design:** Adopts an 8" full-range speaker unit for clear and natural sound reproduction.
- **Minimalist Appearance:** Features a clean and stylish design with high-strength ABS housing, suitable for modern indoor spaces.
- **Easy Ceiling Installation:** Designed for convenient ceiling mounting in airport halls, shopping malls, offices, and other indoor commercial environments.

100V Fixed Voltage

Full-Range Speaker

PARAMETERS:

Frequency Response	55 Hz~20 kHz
Sensitivity	90 dB ± 3 dB (1 m / 1 W)
Max. SPL	100 dB (1 m / 10 W)
Rated Power	10 W
Power Taps (100 V)	10 W / 5 W
Rated Impedance	1 kΩ (10 W) / 2 kΩ (5 W)
Input Voltage	100 V
Speaker Design	Full-range speaker
Speaker Component	8" full-range speaker unit
Housing Material	ABS
Grille Material	Powder-coated iron mesh
Color	White
Mounting	Ceiling-mounted
Application Environment	Indoor
Operating Temperature	-25°C to +55°C
Operating Humidity	≤95% RH, non-condensing
Cutout Dimension	Φ210 mm
Dimensions	Φ232 × 90 mm
Package Dimensions	230 × 95 × 235 mm
Weight	0.94 kg
Warranty	2 years

DIMENSION

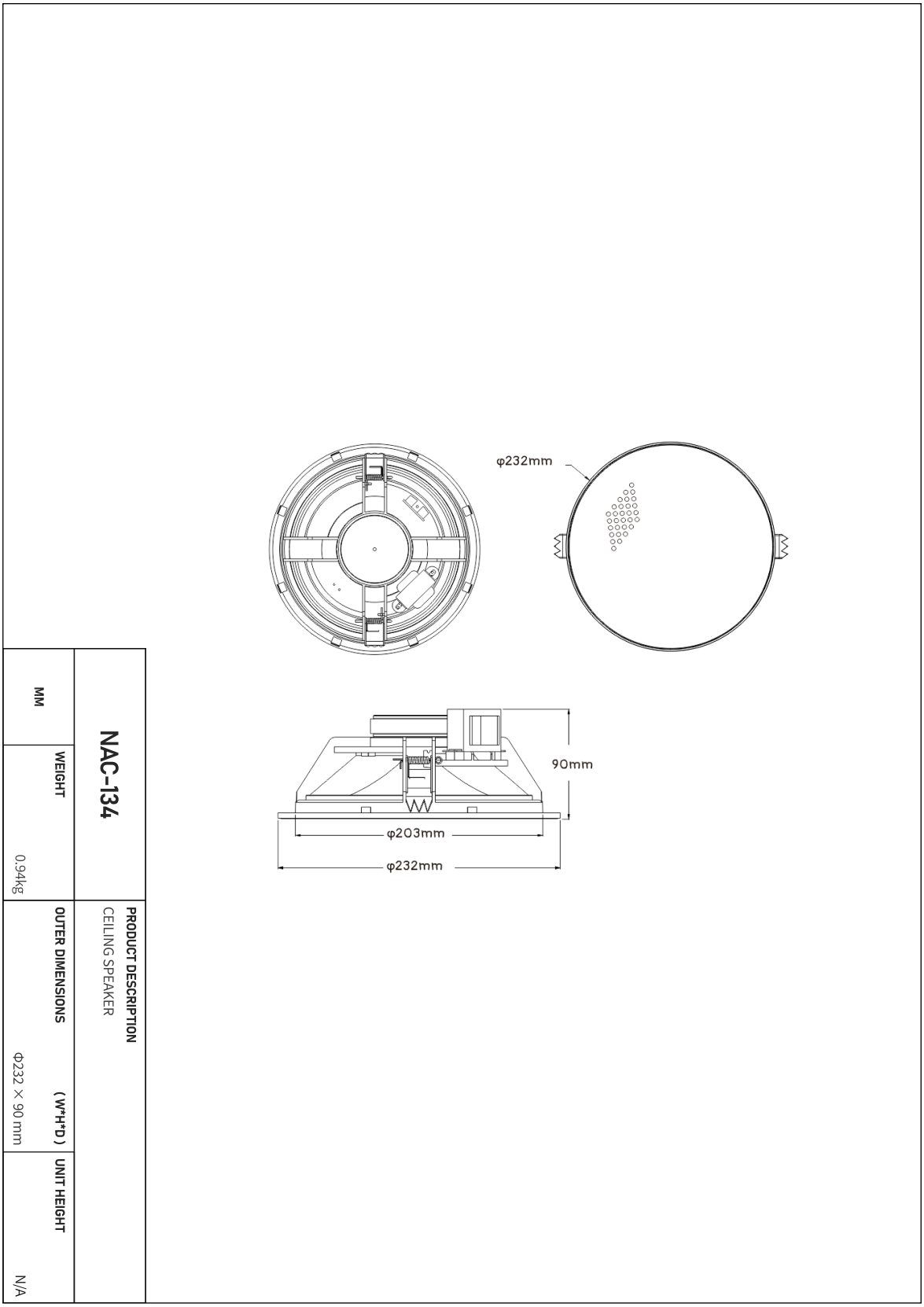
φ232mm
90mm
φ203mm
φ232mm
NAC-134
PRODUCT DESCRIPTION
CEILING SPEAKER
OUTER DIMENSIONS (W*H*D)
Φ232 × 90 mm
WEIGHT
0.94kg
UNIT HEIGHT
N/A
MM