GEN-3102A03 Network LED Clock





INTRODUCTION

GEN-3102A03 is a DC/PoE-powered network LED clock terminal that supports SIP and VMS calls, up to 20 multicast streams, storage for 20 audio files, priority management, scheduled playback, HTTP API-triggered customizable events, and connection to up to two external constant-impedance speakers, making it ideal for schools.

MAIN FEATURES

- **Multi-Source Audio Reception:** Supports reception of SIP audio, ONVIF audio, Bluetooth audio, and multicast streams.
- **Local Audio Storage:** Built-in 80 MB local storage for up to 20 WAV/MP3 audio files.
- **Audio Input:** Provides one audio input with MIC/LINE selectable via the web interface.
- **Control I/O:** Provides two control inputs and one control output, with configurable 12 V DC output via the web interface.
- **HTTP API Trigger:** Supports HTTP API for triggering local file playback.
- **Built-in 2 × 30 W Amplifier:** Integrated 2 × 30 W amplifier under DC power supply for external constant-impedance analog speakers.
- **Scheduled Playback:** Built-in scheduler for timed playback of local audio files.
- **Flexible Power Supply:** Supports PoE / PoE+ and DC power supply.

PARAMETERS:

Network Interface	10/100Base-TX, RJ45
PoE	IEEE 802.3af/at
Power Input	1 × DC 24 V
Network Protocols	TCP/IP, UDP, HTTP, RTP, RTSP, ARP, ICMP, NTP, SIP, ONVIF, DHCP
Configuration	Web interface or DevConfig Tool
Audio Transmission	Multicast, up to 20 streams (editable)
Audio Codec	Opus, PCMU (G.711u), PCMA (G.711a), G.722
Audio File Format	WAV, MP3
Audio Storage	80 MB local storage, up to 20 audio files
Audio Stream	WAV 8/16/22/44.1/48 kHz, 8/16-bit, mono/stereo; MP3 32/44.1/48 kHz, 64–320 kbps, CBR/VBR, mono/stereo
Audio Input	1 × Line/MIC input, balanced, switchable
Input Sensitivity	-10 dB (Line), -20 dB (MIC)
Bluetooth Input	1 × 2.4 GHz
Frequency Response	100 Hz to 20 kHz
SNR	⩾85 dB
Amplifier Output	2 × 30 W / 8 Ω (DC 24 V); 2 × 7 W / 8 Ω (PoE/PoE+)
Control Input	2
Control Output	1 × relay output / 12 V DC output, switchable
Reset Button	1
Microphone	Electret condenser microphone
Directionality	Omnidirectional
Microphone Installation	Built-in
Microphone Sensitivity	-45 ± 3 dB
Microphone SNR	58 dB
Max. Input Sound Level	110 dB (THD < 1%)
Display Color	Red
Display Character Quantity	Up to 10 characters
Brightness Level	3 levels
Housing Material	Sheet metal, ABS
Color	White, Black
Mounting	Wall mounting
Application Environment	Indoor
Operating Temperature	-10°C to +50°C
Operating Humidity	⩽90% RH, non-condensing

PARAMETERS:

Dimensions	366 × 123 × 55 mm
Package Dimensions	491 × 185 × 121 mm
Weight	1.6 kg
Warranty	2 Years

ACCESSORIES:

ACCESSORIES	2 × 6-pin terminal (3.81 mm) 1 × Power adapter (DC 24 V / 2.7 A, optional)

CONNECTION DIAGRAM

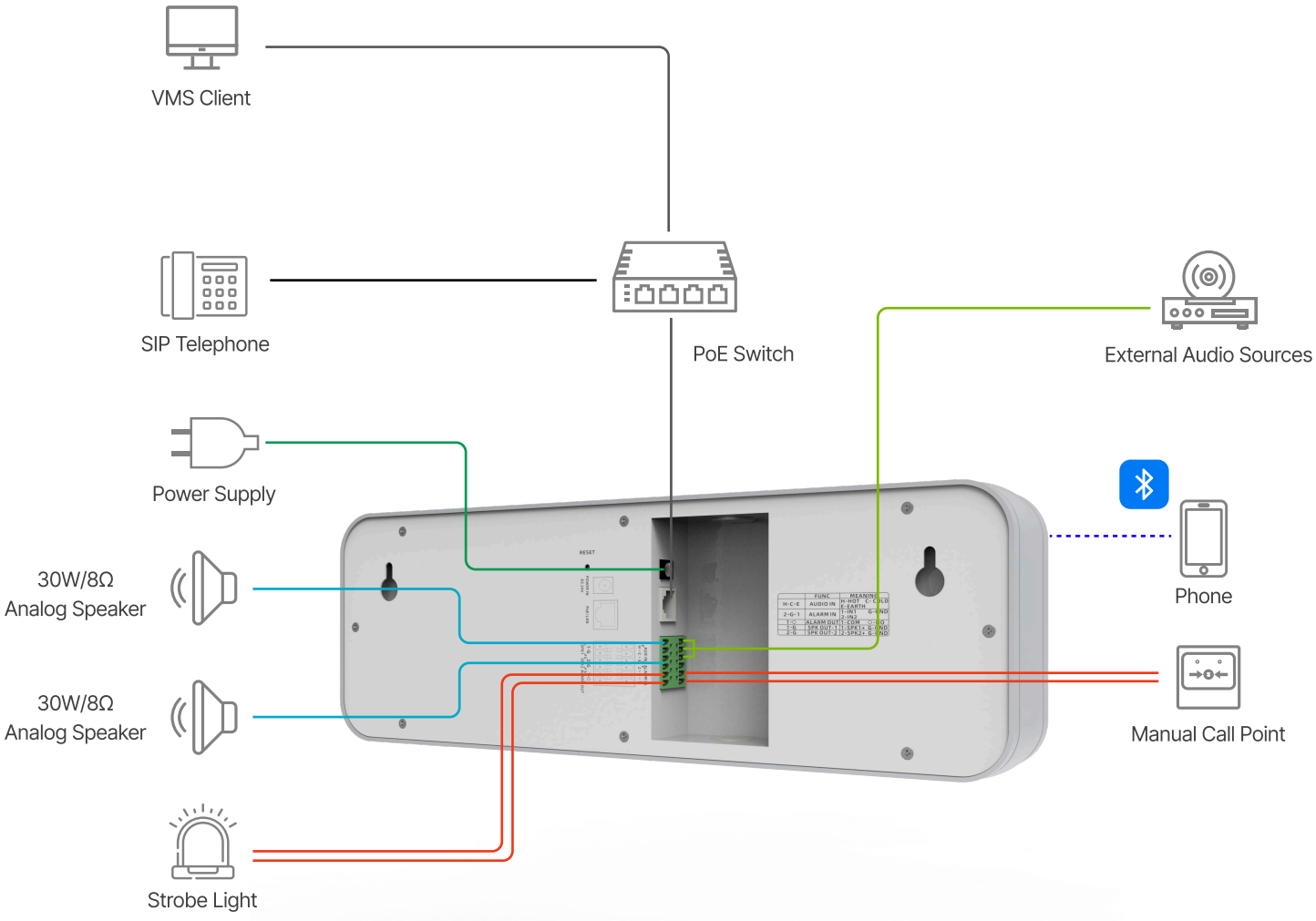

APPLICATION

The GEN-3102A03 Network LED Clock supports direct calls from SIP or VMS platforms. It features a built-in 2 × 30W amplifier and can connect two 8Ω 30W speakers. The time is automatically displayed upon startup and can be synchronized with an NTP server. The device also supports external microphone attachments, preset call targets, and one-touch call initiation, making it ideal for school environments

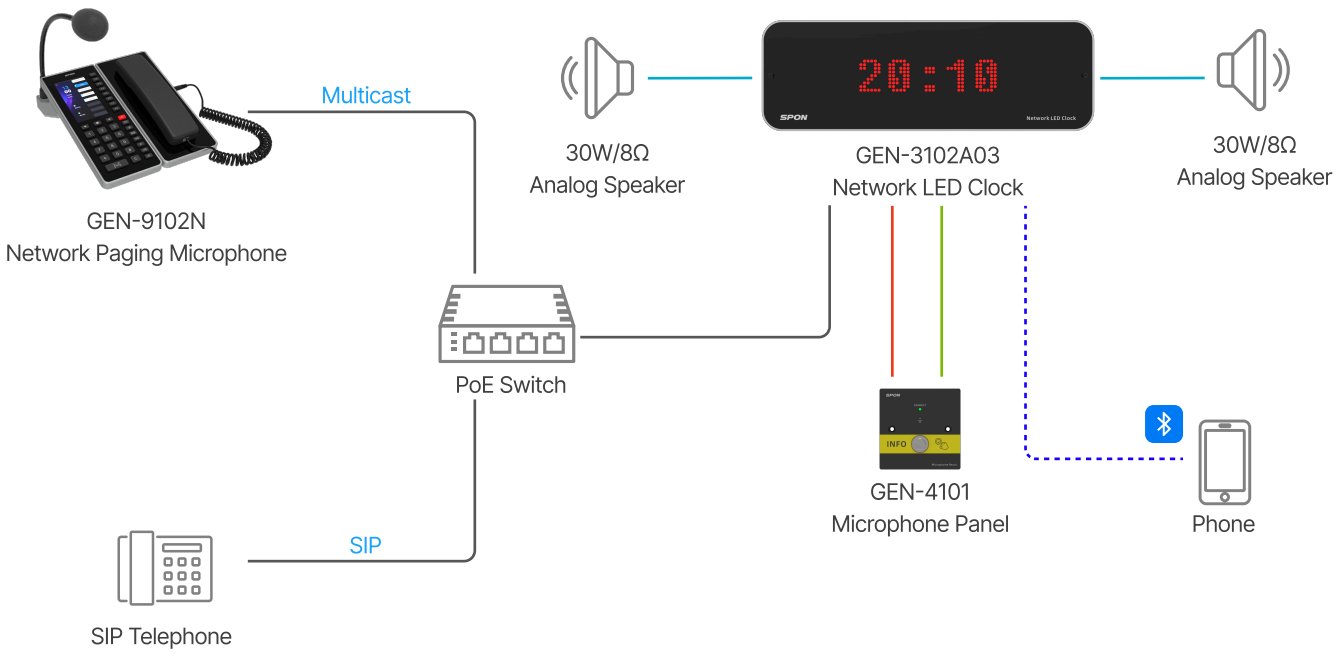

DIMENSION

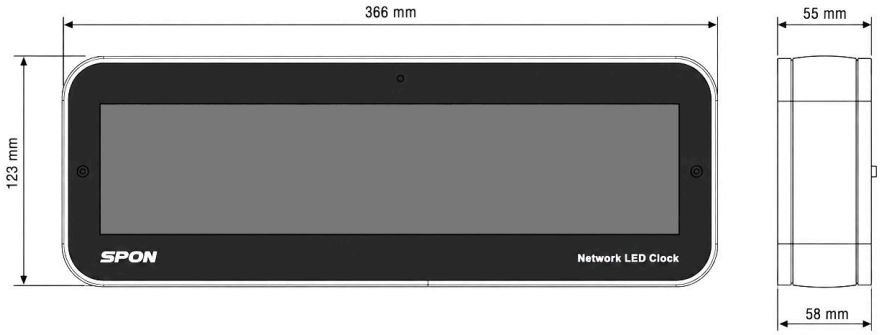

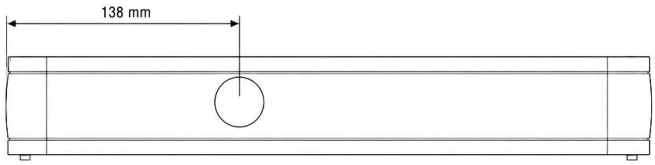

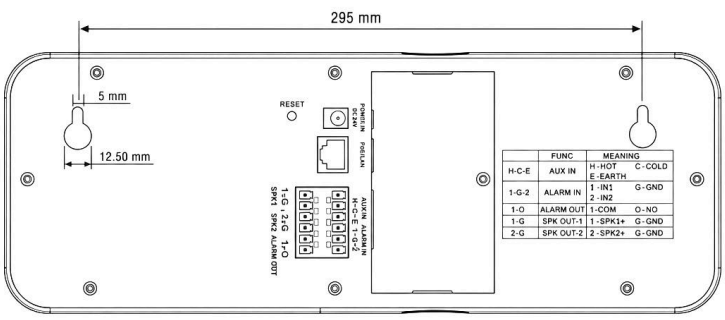

GEN-3102A03	
PRODUCT DESCRIPTION	NETWORK LED CLOCK
OUTER DIMENSIONS (W*H*D)	366 x 123 x 55 mm
UNIT HEIGHT	N/A
WEIGHT	1.6 kg
MM	